Driver Version:	**1.06**
Document Revision:	**2**

FieldServer Driver - Serial
FS8700-71
TAC I/Net 2000

Description

The TAC-I/Net driver allows the FieldServer to transfer data to and from Server and Client devices on a MR LAN over RS-485 using TAC-I/Net driver protocol.

The protocol works over a multidrop RS-485 line and allows only one Client and up to 32 Servers on a network channel. Servers are assigned station addresses that range from 0 to 31. The Client does not have a station address.

If more than 320 points are needed on the I/net network an alternative is for the customer to purchase the 7797-15 Modbus RTU interface card. This interface card will allow 2000 points to be passed to the I/net Sublan. This will change the application from I/net to Modbus, but it will work.

Fieldserver Mode	Nodes	Comments
Client	1	Only 1 client node allowed on multidrop systems
Server	32	This is the limit per i/net panel. The 32 nodes correspond to the maximum of 32 mr's that an i/net panel supports.

Formal Driver Type

Serial
Client or Server

Compatibility Matrix

FieldServer Model	Compatible with this driver
FS-x2010	Yes
FS-x2011	Yes
FS-x40	Yes
FS-x30	Yes

Connection Information

Connection type:	RS-485 (Two wire, Half-Duplex
Baud Rates:	9600 –Vendor Limitation. FieldServer supports all standard baud rates.
Data Bits:	**8**
Stop Bits:	**1**
Parity:	None
Multidrop Capability	**Yes**

Proprietary Physical Interfaces Supported

Fieldserver Model	Adapter Model #	Vendor	Physical Medium

Devices tested

Device	Tested (FACTORY, SITE)
TAC I/Net 7793	SITE

Connection configurations

Connection to an I/Net device can be depicted as follows:

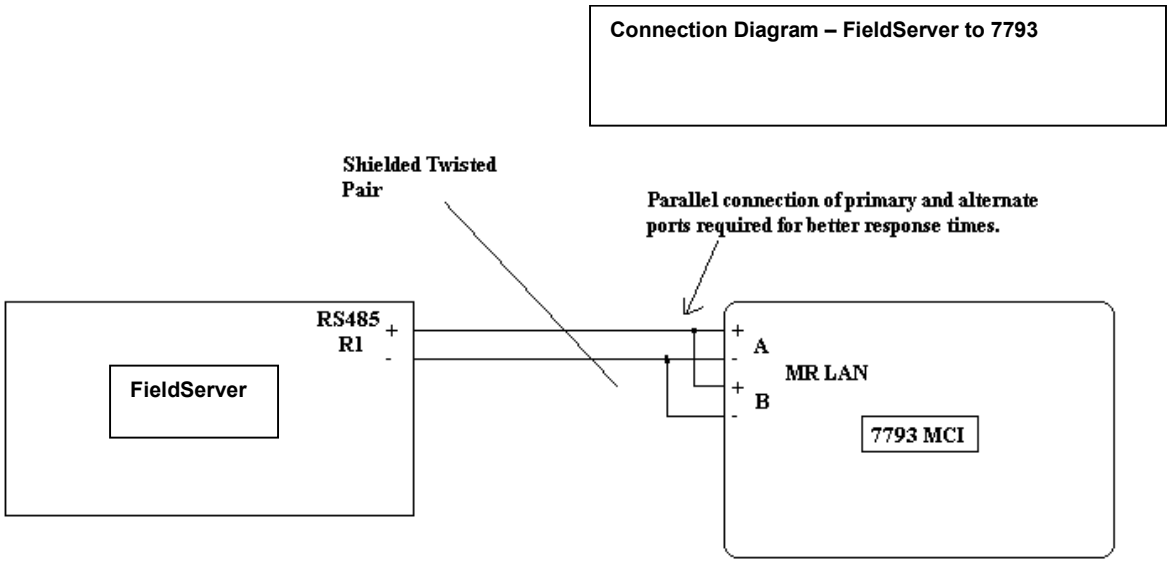

Connection Notes

The TAC-I/Net Client driver supplied with the FieldServer is currently only used for emulating TAC-I/Net hardware such as the 7793 MCI and should not be used under normal circumstances. Please refer to the section on how to configure the FieldServer as a TAC-I/Net Server if you intend to connect the FieldServer to TAC-I/Net hardware as shown in the connection diagram above. TAC-I/Net hardware such as the 7793 MCI are Client devices to the FieldServer since they initiate polls with commands to the FieldServer which acts as a Server.

It is recommended that the FieldServer have a dedicated i/net port and a dedicated 7793 controller to avoid compatibility problems with other devices on the network.

Communications functions - Supported functions at a glance:

Data Types Supported

FieldServer Data Type	Description (or Device Data Type)
analog_input	
analog_output	
discrete_indicate	
discrete_output	
discrete_monitor	
discrete_control	

Read Operations supported

FieldServer as a Client	FieldServer as a Server
Read all points	
Quick poll all points	

Write (Control) Operations supported

FieldServer as a Client	FieldServer as a Server
Control input points	
Control output points	

THIS PAGE INTENTIONALLY LEFT BLANK