70002-0266-11
09/2008

PowerLogic™ ION8600

Metering and control device

Installation Guide

Schneider Electric

Danger

This symbol indicates the presence of dangerous voltage within and outside the product enclosure that may constitute a risk of electric shock, serious injury or death to persons if proper precautions are not followed.

Caution

This symbol alerts the user to the presence of hazards that may cause minor or moderate injury to persons, damage to property or damage to the device itself, if proper precautions are not followed.

Note

This symbol directs the user's attention to important installation, operating and maintenance instructions.

Installation Considerations

Installation and maintenance of the ION8600 meter should only be performed by qualified, competent personnel that have appropriate training and experience with high voltage and current devices. The meter must be installed in accordance with all local and national electrical codes.

⚠ DANGER

Failure to observe the following instructions may result in severe injury or death.

- During normal operation of the ION8600 meter, hazardous voltages are present on its terminal strips, and throughout the connected potential transformer (PT), current transformer (CT), digital (status) input, control power and external I/O circuits. PT and CT secondary circuits are capable of generating lethal voltages and currents with their primary circuit energized. Follow standard safety precautions while performing any installation or service work (i.e. removing PT fuses, shorting CT secondaries, etc).
- The terminal strips on the meter base should not be user-accessible after installation.
- Do not use the ION8600 outputs for primary protection functions. These include applications where the devices perform energy limiting functions or provide protection of people from injury. Do not use the ION8600 in situations where failure of the device can cause injury or death, or cause sufficient energy to be released that can start a fire. The meter can be used for secondary protection functions.
- Do not HIPOT/Dielectric test the digital (status) inputs, digital outputs, or communications terminals. Refer to the label on the ION8600 meter for the maximum voltage level the device can withstand.

⚠ CAUTION

Observe the following instructions, or permanent damage to the meter may occur.

- The ION8600 meter offers a range of hardware options that affect input ratings. The ION8600 meter's serial number label lists all equipped options. Applying current levels incompatible with the current inputs will permanently damage the meter. This document provides installation instructions applicable to each hardware option.
- The ION8600 meter's chassis ground must be properly connected to a good earth ground for safety, and for the noise and surge protection circuitry to function correctly. Failure to do so will void the warranty, and create a risk of electric shock, injury or death.
- Terminal screw torque: Barrier-type (current, voltage, and relay terminal screws: 1.35 Nm (1.00 ft-lbf) max. Captured-wire type (digital inputs/outputs, communications, power supply: 0.90 Nm (0.66 ft.lbf) max.

© 2008 Schneider Electric. All rights reserved.

FCC Notice

This equipment has been tested and found to comply with the limits for a Class A digital device, pursuant to Part 15 of the FCC Rules. These limits are designed to provide reasonable protection against harmful interference when the equipment is operated in a commercial environment. This equipment generates, uses, and can radiate radio frequency energy and, if not installed and used in accordance with the instruction manual, may cause harmful interference to radio communications. Operation of this equipment in a residential area is likely to cause harmful interference in which case the user will be required to correct the interference at his own expense.

This Class A digital apparatus complies with Canadian ICES-003.

The Ringer Equivalence Number (REN) for the ION8600 optional internal modem is 0.6. Connection to the ION8600 internal modem should be made via an FCC Part 68 compliant telephone cord (not supplied). The ION8600 cannot be used on a public coin phone service or party line services.

Network Compatibility Notice for the Internal Modem

The internal modem in meters equipped with this option is compatible with the telephone systems of most countries in the world, with the exception of Australia and New Zealand. Use in some countries may require modification of the internal modem's initialization strings. If problems using the modem on your phone system occur, please contact Schneider Electric Technical Support

Made by Power Measurement Ltd.

Covered by one or more of the following patents:

U.S. Patent No's 7010438, 7006934, 6990395, 6988182, 6988025, 6983211, 6961641, 6957158, 6944555, 6871150, 6853978, 6825776, 6813571, 6798191, 6798190, 6792364, 6792337, 6751562, 6745138, 6737855, 6694270, 6687627, 6671654, 6671635, 6615147, 6611922, 6611773, 6563697, 6493644, 6397155, 6236949, 6186842, 6185508, 6000034, 5995911, 5828576, 5736847, 5650936, D505087, D459259, D458863, D443541, D439535, D435471, D432934, D429655, D427533.

© 2008 Schneider Electric. All rights reserved.

ION8600 Models

The PowerLogic™ ION8600 is available in socket or switchboard form factors.

Socket Meter

The socket meter is designed to fit into S-Base meter sockets and A-to-S Base adapters. Form factors supported include: 9S, 35S, 36S, 39S, and 76S.

Switchboard Meter

The switchboard meter eliminates the need for shorting blocks by providing shorting blocks within the drawout case. All voltage and current connections are made via terminals located on the rear of the switchboard case. When removed from the draw-out case, current inputs are short-circuited by the test switches on the shorting blocks.

Switchboard meters can be ordered with an optional breakout panel that provides easy on-board I/O and communications connections.

RMICAN Model

A socket or switchboard meter that is Industry Canada certified for revenue metering in Canada. Different security options are available, including a factory-sealed version.

In this Guide

This guide contains the following sections. Your workflow may not specifically align with the steps outlined below:

- "Meter Overview" on page 6
- "Meter Labels" on page 7
- "Step 1: Mount the Meter" on page 9
- "Step 2: Wire the Ground Terminal" on page 11
- "Step 3: Wire the Onboard I/O" on page 12
- "Step 4: Wire the Voltage and Current Inputs" on page 16
- "Step 5: Wire the Communications" on page 25
- "Step 6: Wire the Power Supply" on page 29
- "Step 7: Power Up the Meter" on page 29
- "Step 8: Set Up Meter Using the Front Panel" on page 30
- "Step 9: Verify Meter Operation" on page 34
- "Step 10: View Meter Data" on page 37

© 2008 Schneider Electric. All rights reserved.

Meter Overview

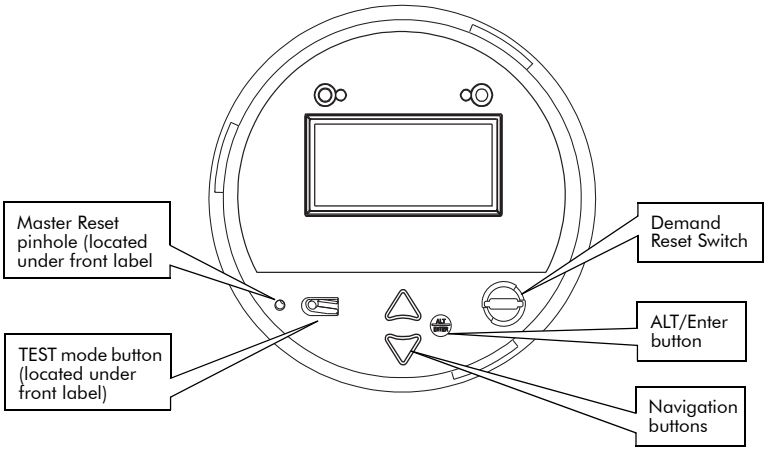

DEMAND RESET SWITCH: Resets the peak demand values logged in the meter. Can be activated with the cover on or off.

ALT/ENTER BUTTON: Toggles between NORM and ALT display modes. Hold for 3 seconds to access Setup menu.

MASTER RESET BUTTON: Recessed to prevent accidental activation. You must remove the meter cover and its label to access.

TEST MODE BUTTON: Places the meter into TEST mode, ceasing accumulation of billable quantities.

NAVIGATION BUTTONS: Press the UP/DOWN buttons to highlight menu items, or increment/decrement numbers.

© 2008 Schneider Electric. All rights reserved.

Meter Labels

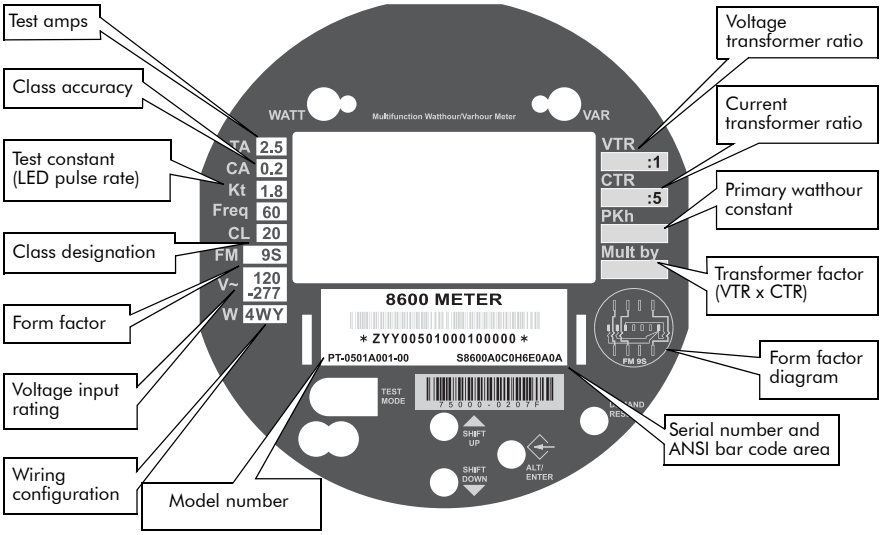

Model Number

Check the model number on your meter's label and make sure it matches the model number on your purchase order or sales order slip.

© 2008 Schneider Electric. All rights reserved.

Before You Begin

Familiarize yourself with the steps in this guide and read the safety precautions presented in "Installation Considerations" on page 3.

⚠ DANGER

Do not power up the meter until the current and voltage wiring is completed.

Recommended Tools

- #1 and #2 Phillips screwdrivers
- Precision flat-head screwdriver
- Wire cutters / stripper

Socket Meter Dimensions

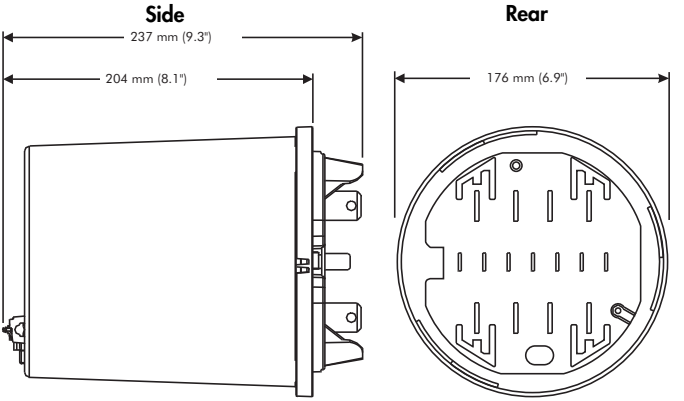

Switchboard Meter Dimensions

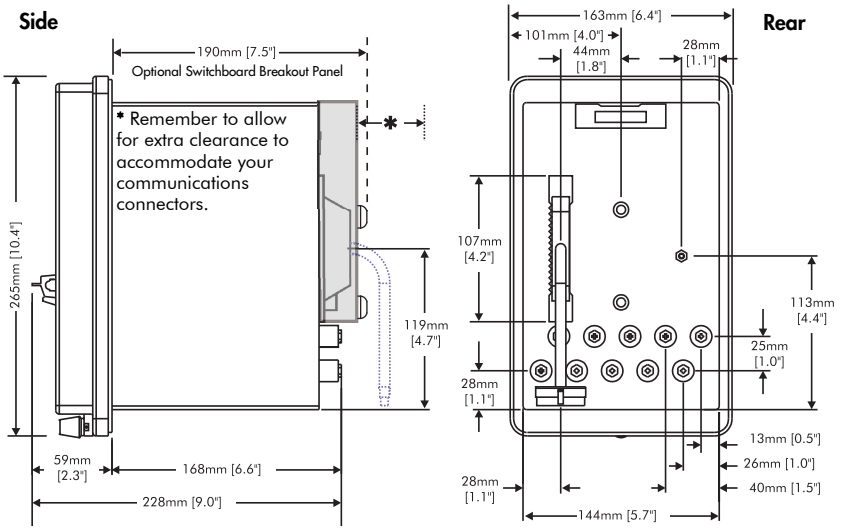

 © 2008 Schneider Electric. All rights reserved.

Step 1: Mount the Meter

Review the steps in this section before installing the meter, and determine the types of revenue sealing devices that you want to use before installing the meter. Examine the meter's label to verify its service type matches your intended application.

⚠ CAUTION

Include a switch or circuit breaker in the installation in close proximity to the unit and within easy reach of the operator. Mark it as the disconnecting device for the unit.

Environmental Considerations

Location	Indoor use
Operating Range	-40 to 85°C (-40 to 185°F)
Display Operating Temperature	-20 to 60°C (-4 to 140°F)
Humidity	5% to 95% non-condensing humidity

⚠ DANGER

Do not power up the meter until the ground terminal is connected -- risk of electric shock.

Socket Meter Mounting

1. If required, attach an anti-tamper seal through the outer cover of the meter to seal the outer casing to the backplate.

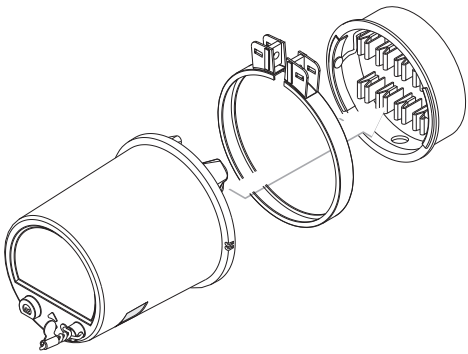

2. Align the meter so that the chassis ground strap will contact the ground source on the socket.
3. Feed communications wiring through the socket's opening from the back of the unit. If your socket is the "OPEN" type, hold the wiring to the side of the meter before pushing it into the socket.

© 2008 Schneider Electric. All rights reserved.

4. Attach the socket-sealing ring and seal the Demand Reset switch (if required).

Switchboard Meter Mounting

1. Prepare a mounting hole for the switchboard case.

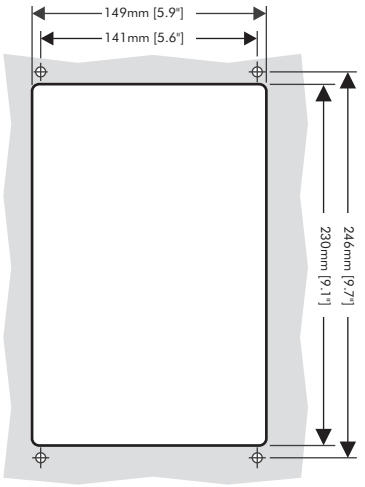

2. Place the switchboard case into the prepared mounting hole. Attach the mounting washers and nuts.

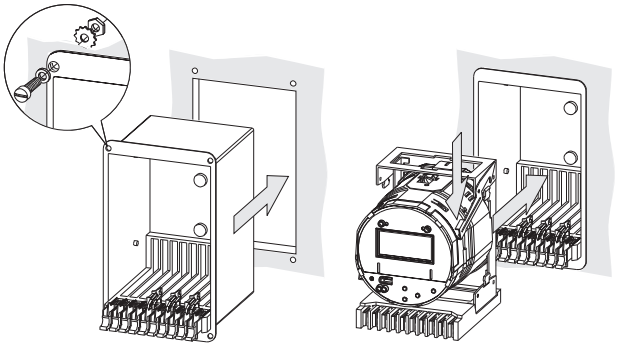

3. Place the case cover into position and tighten the thumbscrew. Apply anti-tamper sealing if required.

 © 2008 Schneider Electric. All rights reserved.

Step 2: Wire the Ground Terminal

⚠ DANGER

The meter must be installed with an adequate low impedance chassis ground connection. Failure to properly connect the meter chassis ground voids the meter warranty. Do not use metal door hinges as a ground path.
Ensure the meter is grounded BEFORE connecting the meter's power supply.

Meter Type	Chassis Ground Connection	Wire Size
Socket	Contact to a clean, unpainted earth grounded surface on the socket front flange.	AWG 12 (3.31 mm^2)
Switchboard	Ground terminal on the rear of the meter.	AWG 14 (2.5 mm^2)

Socket Meter Ground Connection

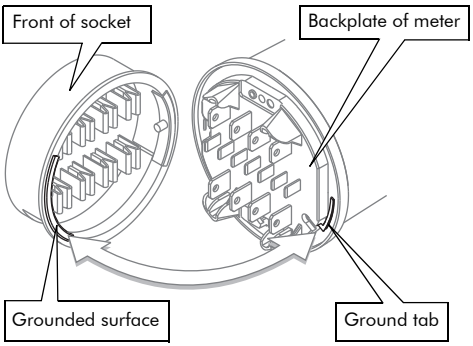

Switchboard Meter Ground Connection

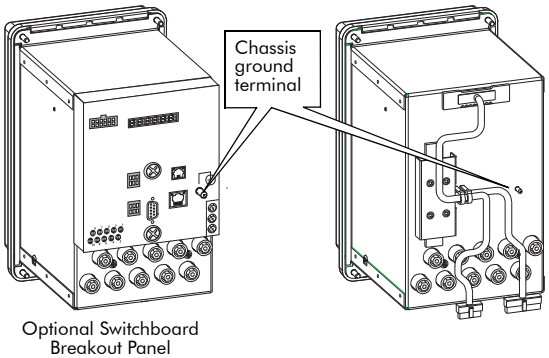

© 2008 Schneider Electric. All rights reserved.

Step 3: Wire the Onboard I/O

If your ION8600 has onboard I/O, a cable is supplied that has a female connector that attaches to the 16 pin male connector on the meter cable, and 16 bare-ended wires that connect to the digital input and output devices. For external I/O refer to the I/O Expander Installation Instructions.

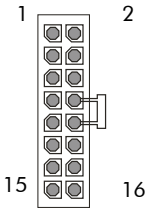

Pin	Wire Colors	Function
1	Black	Output C1 K (Common)
2	White	C1 Z (NC)
3	Red	C2 Z (NC)
4	Green	C1 Y (NO)
5	Orange	C2 Y (NO)
6	Blue	C2 K (Common)
7	White wire / Black marking	C3 K (Common)
8	Red wire / Black marking	C3 Z (NC)
9	Green wire / Black marking	C4 Z (NC)
10	Orange wire / Black marking	C3 Y (NO)
11	Blue wire / Black marking	C4 Y (NO)
12	Black wire / White marking	C4 K (Common)
13	Red wire / White marking	Input S2
14	Green wire / White marking	S1
15	Blue wire / White marking	SCOM
16	Black wire / Red marking	S3

Form C Digital Outputs (Ordering Option)

Solid State Digital Input Excitation

Type	Form C solid state outputs (4) C1, C2, C3, C4 supported through meter
Max Load Voltage	200 VAC/VDC
Max Load Current	100 mA
ON Resistance	30 Ω typical, 50 Ω maximum
OFF Resistance	400 MΩ minimum
Isolation	3250 V rms, 60 Hz for 1 minute (to meter) 1000 V rms, 60 Hz for 1 minute (btwn outputs)
Update Rate	20 ms (accuracy = +/- 7 ms)[1]
Signal Type	Continuous or pulse
Precautions	Use a clamping diode for DC supplies Use an MOV for AC supplies Protect with 250 mA slow-blow fuse
Max Output Transition	50 per second
Lifetime	No load = 10,000,000 operations Rated voltage and load = 100,000 operations

[1] Not including communication lag time; state changes occur within 20 ms.

 © 2008 Schneider Electric. All rights reserved.

Typical Form C Digital Output Connections

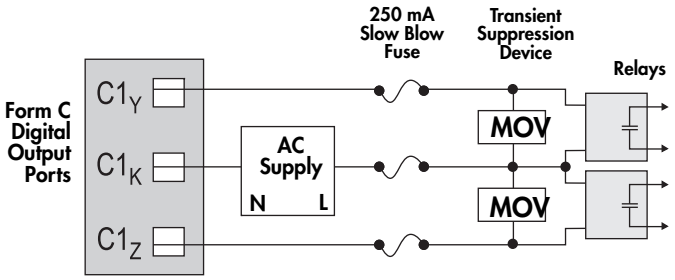

Form A Digital Inputs (Ordering Option)

Internal Digital Input Excitation

Type	Form A inputs (3) S1, S2, S3, SCOM Self-excited (internal 30 Vdc supply)
Wire	Use wiring appropriate for the application.
Min. Pulse Width	20 ms
Max. Input Transition Rate	50 per second
Scan Time	20 ms
Timing Resolution	1 ms, with 2 ms accuracy
Inputs	ON for external resistance of 2 kΩ or less OFF for external resistance of 4 MΩ or greater

Typical Form A Digital Input Connections - Internal Excitation

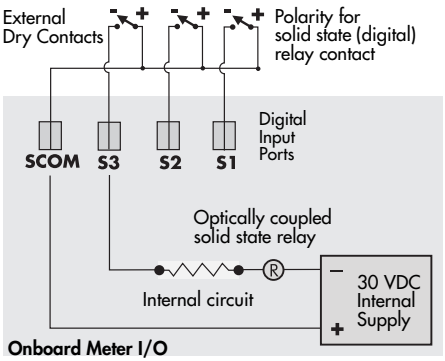

© 2008 Schneider Electric. All rights reserved.

External Digital Input Excitation

Voltage Range	24 to 130 Vdc (external)
Min. Pulse Width	20 ms
Max. Input Transition Rate	50 per second
Scan Time	20 ms
Timing Resolution	1 ms, with 2 ms accuracy
Inputs	ON for external resistance of 2 kΩ or less OFF for external resistance of 20 MΩ or greater

Typical Form A Digital Input Connections - External Excitation

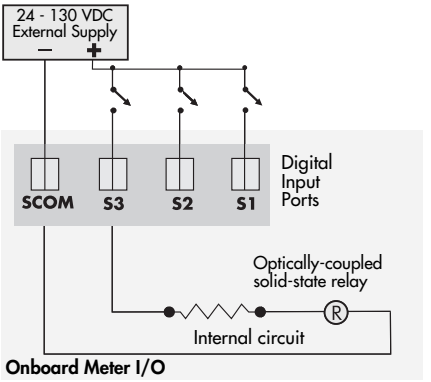

Setting Jumper for External Digital Input Excitation

The meter default is internal digital input excitation.

1. Ensure power supply to meter is not connected.
2. Remove meter cover; remove any anti-tamper sealing devices located at meter's base.
3. Rotate plastic cover ¼ turn counter-clockwise; pull cover off.

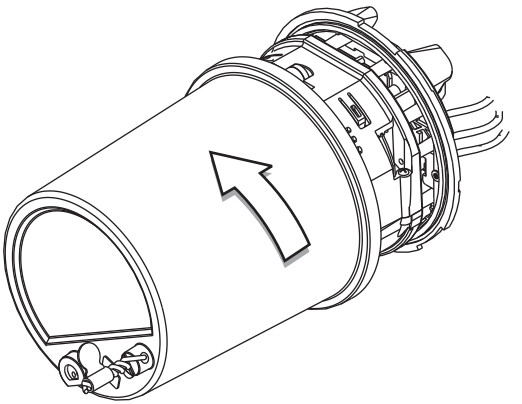

 © 2008 Schneider Electric. All rights reserved.

4. Remove one jumper block, and place the other jumper block on pins 2 and 3 of the four-pin header (as shown in diagram).

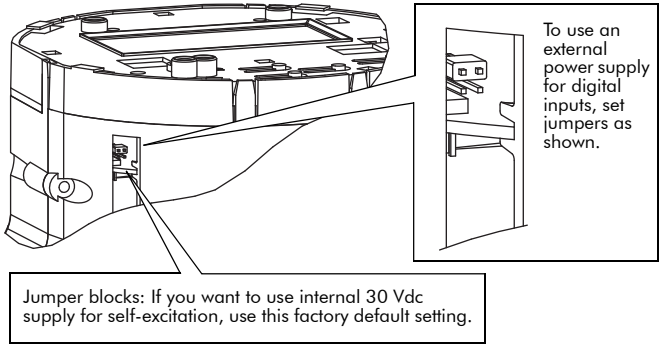

5. Replace the plastic cover and any anti-tamper sealing.

   Onboard I/O internal excitation is now disabled; an external supply can be used for external contacts.

Precautions

State change latency .....20 ms (digital output)
40 ms (digital input modules)

Critical control schemes .....Use intermediate mechanisms so relay control can be disabled for servicing.

© 2008 Schneider Electric. All rights reserved.

Step 4: Wire the Voltage and Current Inputs

Form 9 and 9S (3 element)

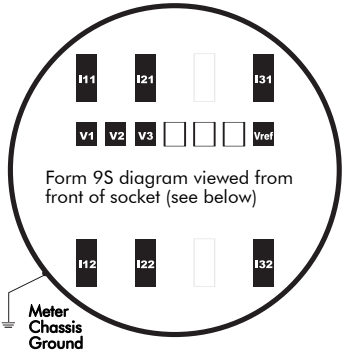

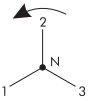

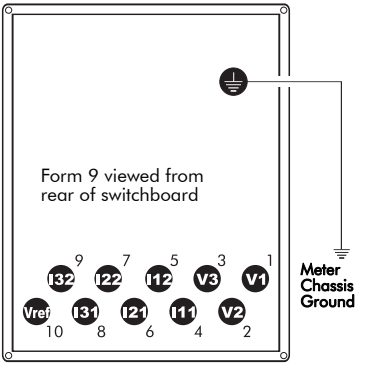

Front of socket (wiring view)

Back of meter

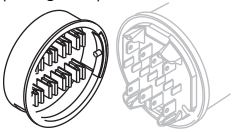

VOLTS MODE = 9S-4 Wire Wye/Delta
120 V L-N

See "Phasor Diagrams" on page 34 to verify meter operation.

Form 9 and 9S, 4-Wire Wye, no PTs, 3 CTs

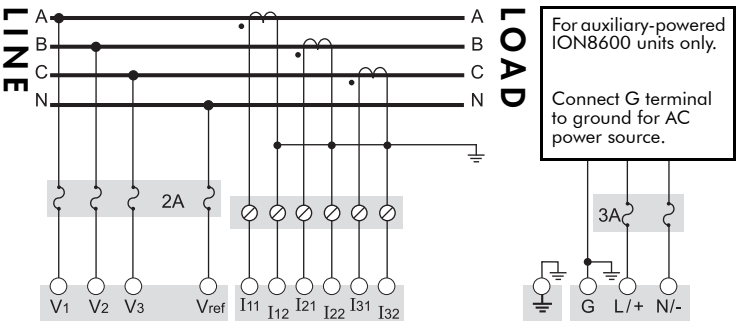

Form 9 and 9S 4-Wire Wye, 3 PTs, 3 CTs

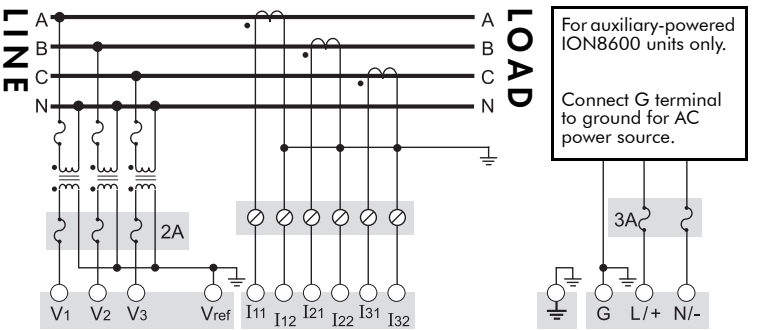

 © 2008 Schneider Electric. All rights reserved.

Form 9 and 9S, 3-Wire Wye, 3 PTs, 3 CTs

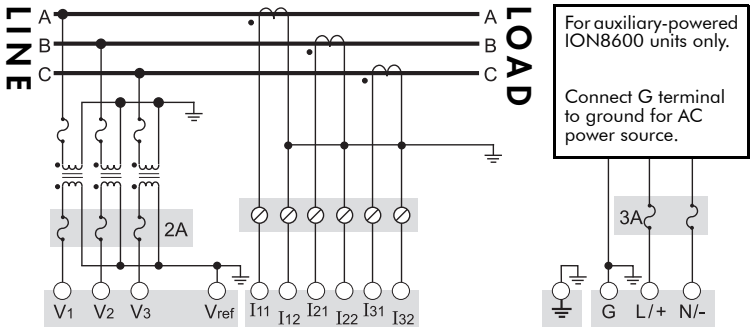

Form 9 and 9S, 3-Wire Wye, 3 PTs, 2 CTs

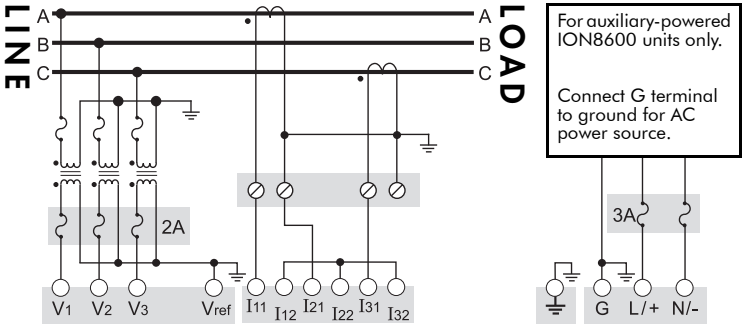

Form 9 and 9S 4-Wire Delta, no PTs, 3 CTs (Red/High Leg Delta)

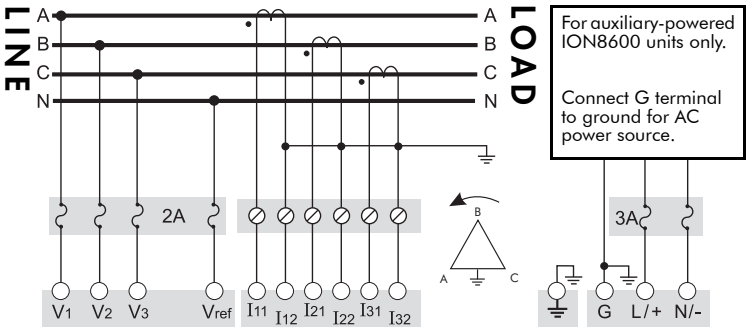

⚠ CAUTION

BEFORE performing an installation using the above Form 9 or 9S, 4-Wire Delta wiring configuration, see the Red/High Leg Delta technical note (available for download from the PowerLogic website) for important details.

© 2008 Schneider Electric. All rights reserved.

Form 35 and 35S (2-element)

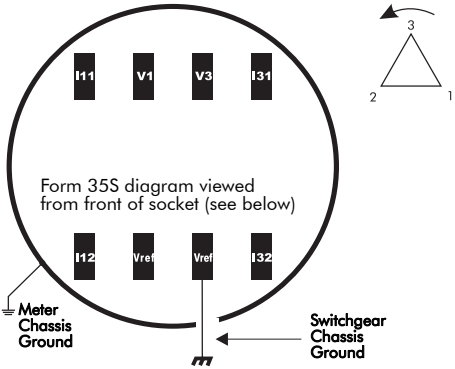

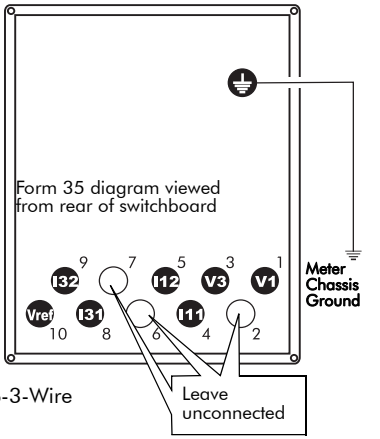

Front of socket (wiring view)

Back of meter

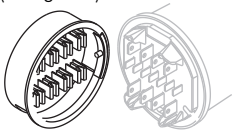

VOLTS MODE = 35S-3-Wire
120 - 480 V L-N

See “Phasor Diagrams” on page 34 to verify meter operation.

Form 35 and 35S 3-Wire Delta, 2 PTs, 2 CTs

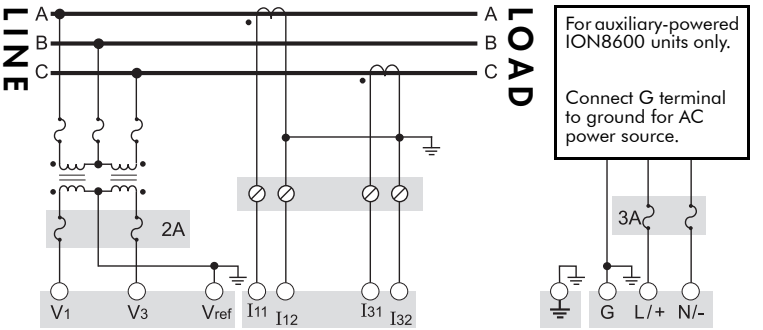

Form 35 and 35S, 4-Wire Wye, 2 PTs, 3 CTs*

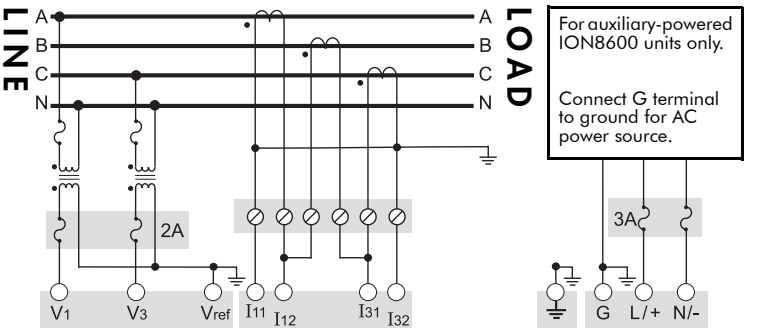

* This configuration can affect some of the meter’s parameter calculations. Contact Schneider Electric for details.

© 2008 Schneider Electric. All rights reserved.

Form 35 and 35S, 3-Wire Delta, No PTs, 2 CTs

⚠ CAUTION

The pinout silhouette below is specific to **Form 35 and 35S, 3-Wire Delta, No PTs, 2 CTs**. Ensure Vref is **not** connected to ground.

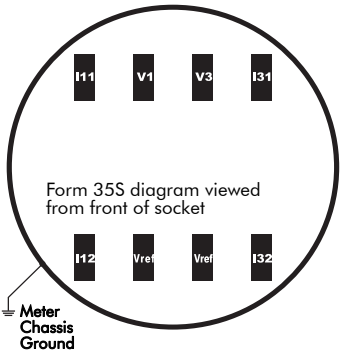

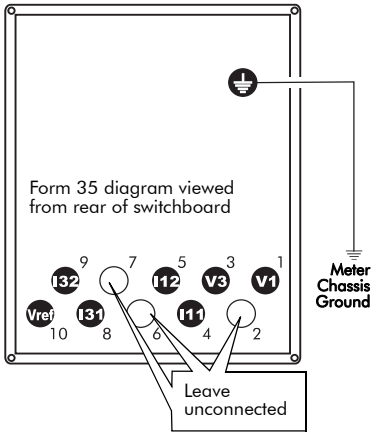

See "Phasor Diagrams" on page 34 to verify meter operation.

VOLTS MODE = 35S-3-Wire
120 - 480 V L-N

NOTE

This configuration can be used without PTs **provided voltage specifications are within the acceptable range**. Acceptable values differ for blade powered and auxiliary powered meters. See "Step 6: Wire the Power Supply" on page 29 for these values.

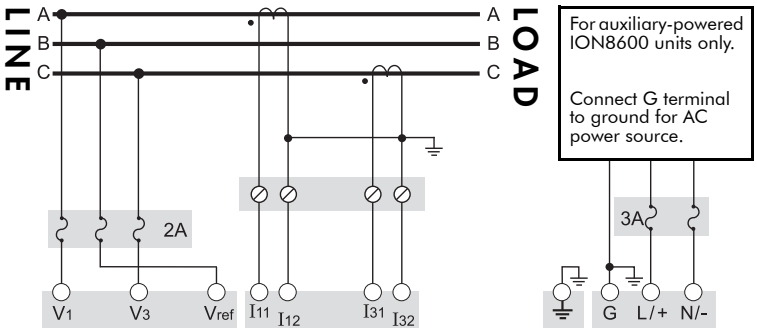

© 2008 Schneider Electric. All rights reserved.

Form 36 and 36S (2½-element)

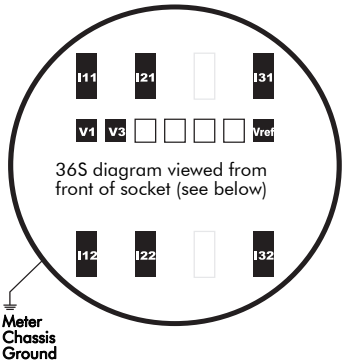

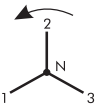

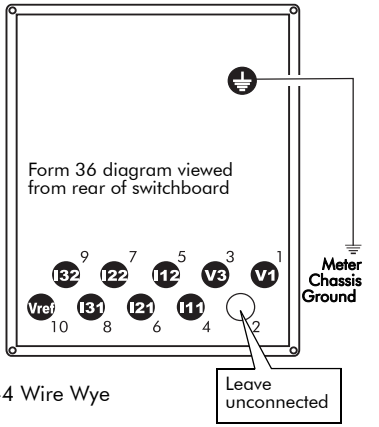

Front of socket (wiring view)

Back of meter

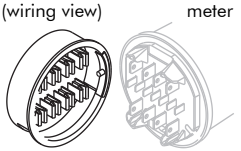

VOLTS MODE = 36S-4 Wire Wye
57 - 277 V L-N

See "Phasor Diagrams" on page 34 to verify meter operation.

Form 36 and 36S, 4-Wire Wye, no PTs, 3CTs

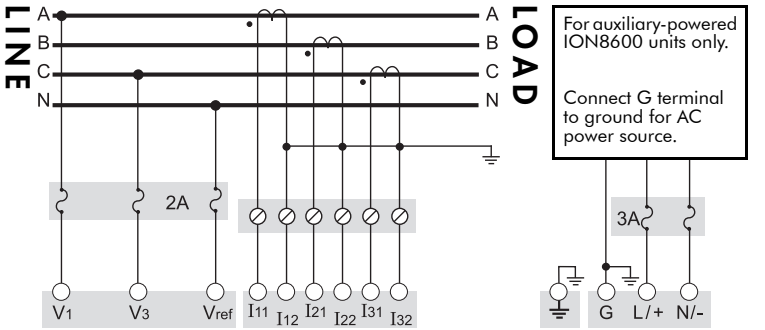

Form 36 and 36S 4-Wire Wye, 2 PTs, 3 CTs

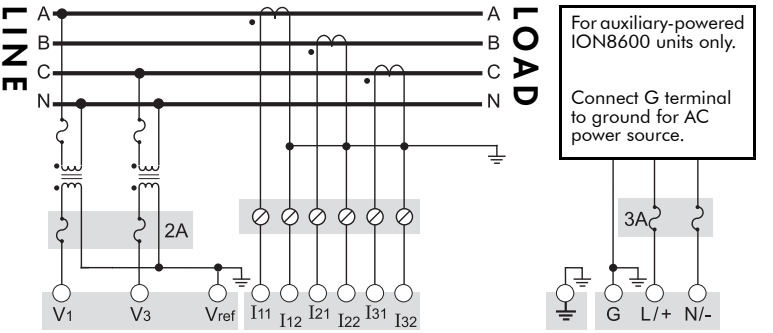

 © 2008 Schneider Electric. All rights reserved.

Form 39S (3 element; I4 optional)

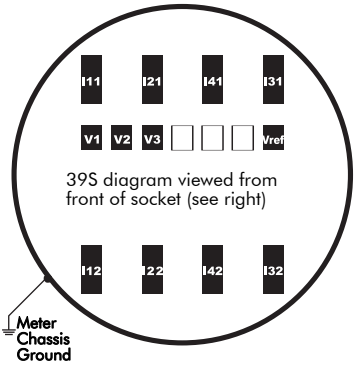

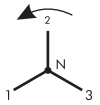

See "Phasor Diagrams" on page 34 to verify meter operation.

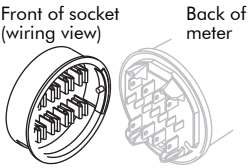

VOLTS MODE = 9S 4 Wire Wye/Delta
57 - 277 V L-N
I4 optional input for ION8600A / ION8600B meters only

Form 39S 4-Wire Wye, no PTs, 4 CTs

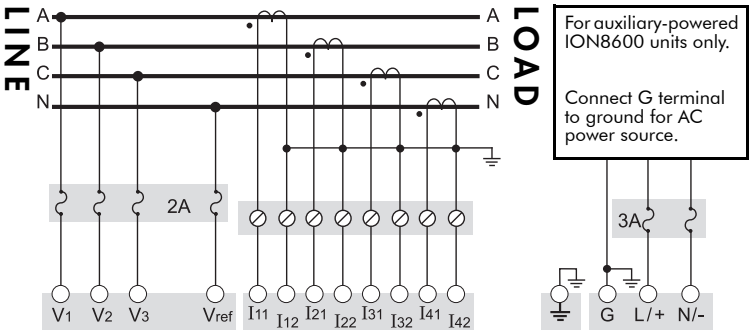

Form 39S 4-Wire Wye, 3 PTs, 4 CTs

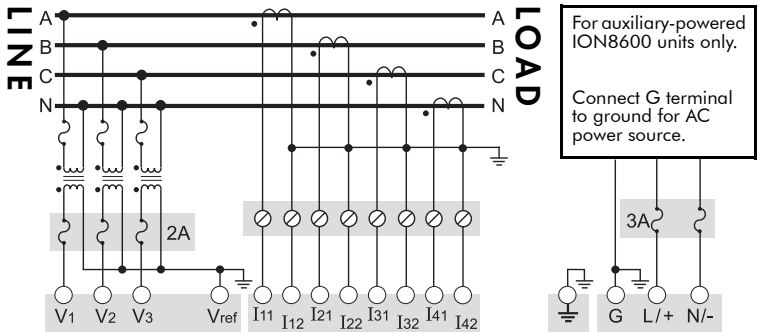

VOLTS MODE = 9S 4 Wire Wye/Delta
I4 optional input for ION8600A / ION8600B meters only.

© 2008 Schneider Electric. All rights reserved.

Form 76S

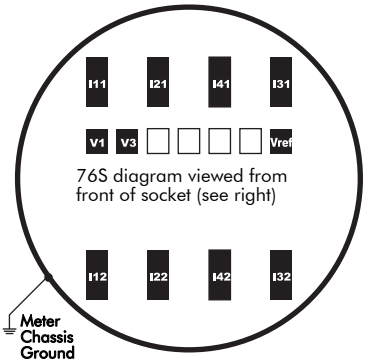

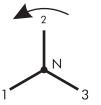

See “Phasor Diagrams” on page 34 to verify meter operation.

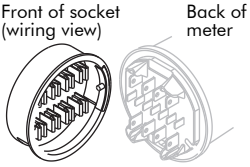

VOLTS MODE = 36S 4 Wire Wye
57 - 277 V L-N
I4 optional input for ION8600A / ION8600B meters only

Form 76S 4-Wire Wye, 2 PTs, 4 CTs

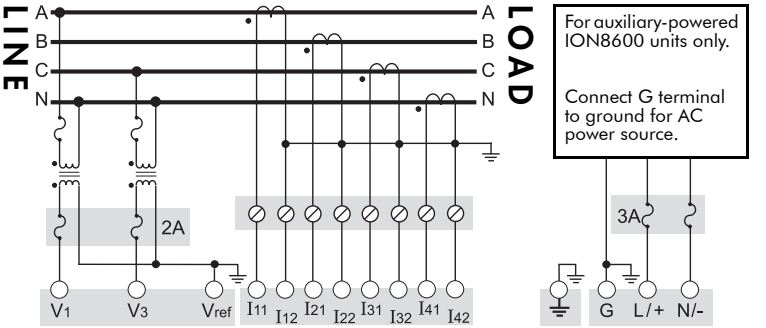

Protect all phase voltage sense leads by breakers or fuses at the source. All voltage connections to the meter must be fused with a 2 A slow-blow fuse.

 © 2008 Schneider Electric. All rights reserved.

Voltage Inputs

Inputs (9S/39S)	Va, Vb, Vc, Vref
(35S)	Vab, Vcb, Vref
(36S/76S)	Va, Vc, Vref
Connector Type	Ring or split ring connector
Wire	2.1 to 3.3 mm^2 (14 to 12 AWG)
Steady State (9S/36S/39S/ 76S)	Standard 57-277 (+/-15%) VLN rms[1]
Overload (9S/36S/39S/76S)	120 - 277 (+/-20%) VLN rms (standard) for 6 hours max[1] 57.7 - 69.3 (+/- 20%) VLN rms (low voltage) for 6 hours max[1]
Steady State (35S)	120 - 480 (+/-15%) VLL rms[1]
Overload (35S)	120 - 480 (+/- 20%) VLL rms for 6 hours max[1]
Dielectric Withstand	2500 Vrms, 60 Hz for 60 s
Surge Withstand	6 kV peak (1.2/50 uS) voltage surge L-L and L-GND
Input Impedance	5M Ω per phase (phase-Vref)

[1] Specifications are limited by the operating range of the power supply if a non-aux power supply is used.

Current Inputs: Low Current (1A) Option

Inputs	Ia, Ib, Ic, (I neutral - 39S/76S only)
Connector Type	Ring or split ring connector
Wire	2.1 to 3.3 mm^2 (14 to 12 AWG)
Starting Current	0.001 A RMS
Input Rating	1/10 A RMS (In= 1 A or 2 A, Imax=10 A)
Overload	200 A RMS for 1 s, non-recurring
Dielectric Withstand	2500 Vrms, 60 Hz for 60 s
Max. Voltage	600 V RMS
Surge Withstand	6 kV peak (1.2/50 uS) voltage surge L-L and L-GND Common and Transverse modes
Burden	0.05 VA per phase at 1 A (switchboard)

© 2008 Schneider Electric. All rights reserved.

Current Inputs: Standard (5A)

Inputs	Ia, Ib, Ic, I neutral (39S/76S only)
Connector Type	Ring or split ring connector
Wire	2.1 to 3.3 mm^2 (14 to 12 AWG)
Starting Current	0.005 A RMS (In=1 A; Imax=20 A)
Overrange	to 50A RMS
Input Rating	0.05/20A RMS
Overload	500 A RMS for 1 s, non-recurring
Dielectric Withstand	2500 Vrms, 60 Hz for 60 s
Max. Voltage	600 V RMS
Surge Withstand	6 kV peak (1.2/50 uS) voltage surge L-L and L-GND Common and Transverse modes
Burden	0.20 VA per phase at 5 A (switchboard) 0.05 VA per phase at 5 A (all socket mounts)

NOTE

Set up for Volts Mode is included with each wiring diagram. Refer to "Step 8: Set Up Meter Using the Front Panel" on page 30 to learn how to set up Volts Mode on the meter.

Using Potential Transformers

System Mode	Voltage Range	Requires PTs
Wye	120 VAC L-N or 208 VAC L-L	no
	277 VAC L-N or 480 VAC L-L	no
	347 VAC L-N or 600 VAC L-L	yes
	over 347 VAC L-N or 600 VAC L-L	yes
Single Phase	120 VAC L-N or 240 VAC L-L	no
	277 VAC L-N or 554 VAC L-L	no
	over 277 VAC L-N or 554 VAC L-L	yes
Delta	up to 480 VAC L-L	no[1]
	over 480 VAC L-L	yes

[1] See "Form 35 and 35S, 3-Wire Delta, No PTs, 2 CTs" on page 19 for details.

© 2008 Schneider Electric. All rights reserved.

Step 5: Wire the Communications

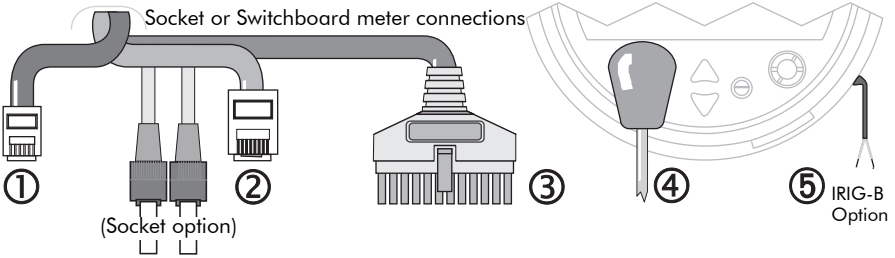

①

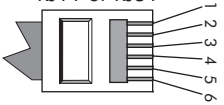

Optional Modem RJ11 or RJ31on COM2
FCC part 68 telephone cord

RJ11 (6 pin)
Pin 3 = Ring (RJ11)
Pin 4 = Tip (RJ11)

RJ31 (8 pin)
Pin 1 = Ring (out): connect to other device
Pin 4 = Ring (in): from telephone co.
Pin 5 = Tip (in): from telephone co.
Pin 8 = Tip (out): connect to other device

②

10Base-T (RJ45) Category 3 UTP (min.)
Pin 1 = Transmit Data +
Pin 2 = Transmit Data -
Pin 3 = Receive Data +
Pin 6 = Receive Data -
IP Service Ports:
ION = 7700
Modbus RTU = 7701
Modbus TCP = 502
EtherGate COM1 = 7801
EtherGate COM4 = 7802
DNP/TCP = 20,000

③

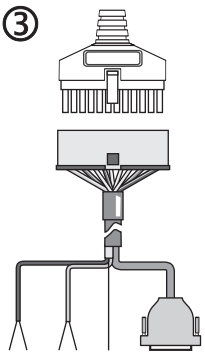

DB9 Serial Assignments

PIN	DCE	Description
1	--	Not connected
2	TXD	Transmit (out)
3	RXD	Receive (in)
4	--	Not connected
5	GND	Ground
6	DTR	Terminal Ready
7	CTS	Clear to send
8	RTS	Request to send
9	--	Not connected

COM1: RS-232 or RS-485
COM4: RS-485

Pair 1 (COM1)
White = RS-485 COM1 Data +
Black = RS-485 COM1 Data -

Pair 2 (COM4)
Red = RS-485 COM4 Data +
Black = RS-485 COM4 Data -
Both pairs share shield

②

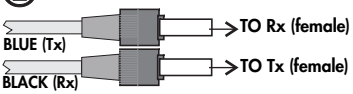

Wire = 62.5/125 multimode fiber optic
Length = 68.6 mm (27 in)
Connector type =ST (male)
Max Length = 2000 m (6562 ft)
Data Rate =10 Mbps
Isolation = Optical
Attach male blue (Tx) to receive (Rx)
Attach male black (Rx) to transmit (Tx)

④

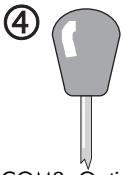

COM3: Optical Port, ANSI Type II
Unit ID = 102
BAUD default = 9600 bps
RTS delay = 0.010 (interval)
Default protocol = ION

⑤

Optional IRIG-B
Red = + Black = –
Wire = twisted pair
22 AWG (0.33 mm^2)
Nom Voltage = 5 Vdc ±10%
Max Voltage = 8 Vdc

© 2008 Schneider Electric. All rights reserved.

Switchboard Meter Wire Cluster

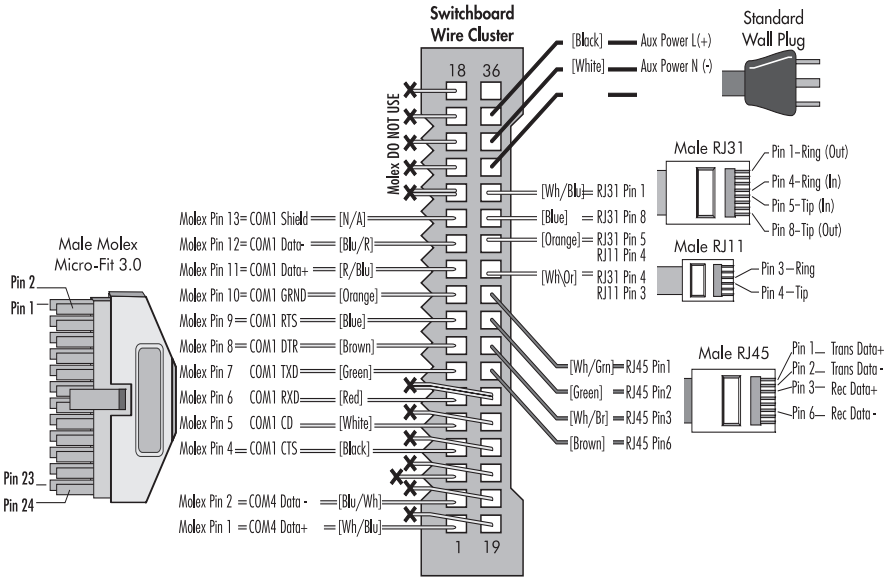

Molex Pin Assignments

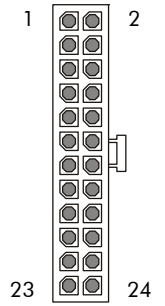

Molex Connector

Pin	Wire Colors	Function
1	White/Blue	COM 4 Data+ or inactive
2	Blue/White	COM 4 Data– or inactive
3	Black/Blue	For I/O Expander—Do not Use
4	Black	COM 1 RS-232 CTS
5	White	COM 1 RS-232 CD
6	Red	COM 1 RS-232 RXD
7	Green	COM 1 RS-232 TXD
8	Brown	COM 1 RS-232 DTR
9	Blue	COM 1 RS-232 RTS
10	Orange	COM 1 RS-232 Ground (isolated)
11	Red/Blue	COM 1 RS-485 Data+
12	Blue/Red	COM 1 RS-485 Data –
13	N/A	Common RS-485 Shield
14	Two wires: Black/Orange, Black/Green	N/A – Do not Use
15	White/Orange	
16	Orange/White	
17	White/Green	
18	Green/White	
19	White/Brown	
20	Brown/White	
21	White/Grey	
22	Grey/White	
23	Red/Blue	
24	Two wires: Red/Orange, Red/Green	

© 2008 Schneider Electric. All rights reserved.

Communications Options

The ION8600 meter can also be ordered with the IRIG-B communication option.

NOTE

Not all communication options are available on all meter models. Your meter may not include all the options listed below.

Port	Available Options	Notes
COM1	RS-232 / RS-485	User selectable RS-232 or RS-485
COM2	Internal Modem RJ11 or	
	Internal Modem RJ31	
COM3	Optical Port	ANSI Type II optical port located at front of meter
COM4	RS-485	
Network	Ethernet RJ45 (10Base-T)	Ethernet Fiber is only available on socket-style meters, not switchboard.
	Ethernet Fiber[1] (10Base-FL)	

[1] Onboard I/O is not available with the Ethernet Fiber option.

Optional Switchboard Breakout Panel

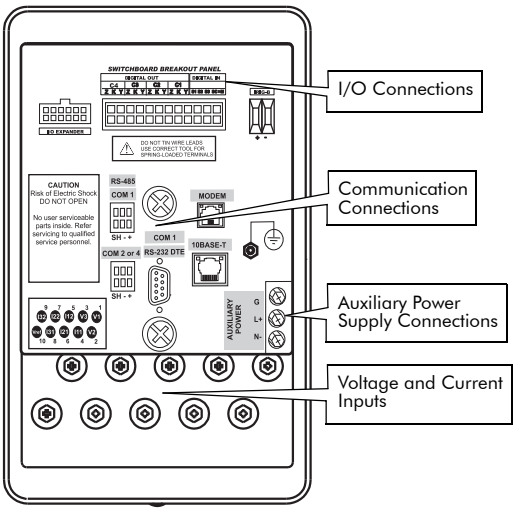

Captured-Wire Connections

Use a small (0.4 x 2.5 mm or 0.02 x 0.1 inch) slot/flat-head screwdriver to open and close (release) the spring-loaded captured-wire connectors on the breakout panel.

Insert the screwdriver into the smaller hole of the terminal and push up to create access for the incoming wire. Insert the wire into the corresponding hole below and remove the screwdriver to clamp the spring on the wire.

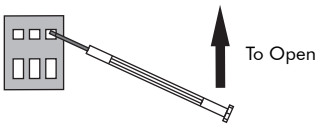

© 2008 Schneider Electric. All rights reserved.

Connector Type	Available	Comments
RS-485	Yes	Captured wire connector
RS-232	Yes	DB9 connector
Internal Modem RJ11	Yes	RJ11 connector
Internal Modem RJ31	Yes	RJ31 connector
Ethernet RJ45	Yes	RJ45 connector
Ethernet Fiber	No	This option available only on socket-style meters
Onboard I/O expansion	Yes	Captured wire connector (requires onboard expansion I/O card)
IRIG-B	Yes	Captured wire connector (requires optional IRIG-B feature)
Auxiliary Power	Yes	Terminal connectors (requires one of the Auxiliary Power options)

NOTE

The COMs on an I/O Expander are not enabled when connected to a breakout panel. Use the RS-485 and RS-232 provided on the breakout panel.

IRIG-B GPS Time Synchronization

IRIG-B cannot be configured via the meter's front panel. See the IRIG-B Product Option document for configuration procedures.

RS-232 Connections

The following graphic shows the connection options using the RS-232 cables.

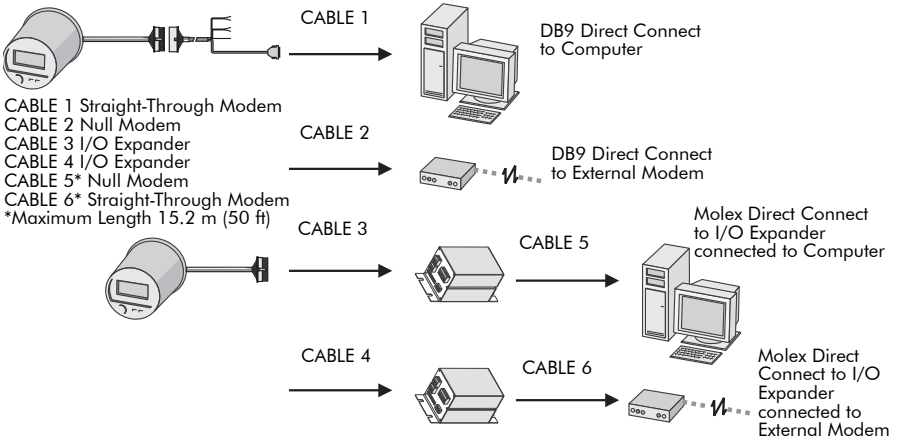

Use an RS-232 to RS-485 converter (such as COM32 or COM128) to connect multiple meter COM1 ports (selected as RS-485) to remote modem.

 © 2008 Schneider Electric. All rights reserved.

Step 6: Wire the Power Supply

- For meters powered from voltage input connections, power is applied when the voltage inputs are energized.
- For externally-powered meters (power cord with grounded U-plug), plug in the connector to the appropriately-rated single-phase AC or DC power source.
- For switchboard breakout panel meters with auxiliary power supply, wire terminal connectors to appropriately-rated single-phase AC or DC power source using wire type and gauge appropriate for supply voltage.

Power Supply Specifications

Specification	Meter Powered from Voltage Inputs		Externally-powered Meter	
	Standard Power Supply	Standard Low Voltage Power Supply	Auxiliary Low Voltage Power Supply	Auxiliary High Voltage Power Supply
Rated Inputs	**9S/39S, 36S/76S** 120-277 VLN RMS (-15/+20%) @ 47-63 Hz **35S** 120-480 VLL RMS (-15/+20%) @ 47-63 Hz	57-70 VLN RMS (-15/+20%) @ 47-63 Hz	65-120 VLN RMS (±15%) @ 47-63 Hz 80-160 VDC (±20%)	160-277 VLN RMS (±20%) @ 47-63 Hz 200-350 VDC (±20%)
Surge Withstand	2 kV peak (1.2/50 uS) voltage surge L-L and L-GND Common and Transverse modes			
Burden	6.8 VA/phase max. (5 VA/phase typical)		18.1 VA max. (12.5 VA typical)	20.3 VA max. (16.9 VA typical)
Minimum Ride-through	100 ms 6 cycles @ 60 Hz at 96 VAC	100 ms 6 cycles @ 60 Hz at 46 VAC	100 ms 6 cycles @ 60 Hz at 46 VAC	100 ms 6 cycles @ 60 Hz at 96 VAC

Step 7: Power Up the Meter

⚠ DANGER

Before you apply power to the meter, ensure that ground is securely connected and that the supply voltage is within the allowed range of the meter's power supply.

1. Close the PT fuses (or direct voltage input fuses).
2. Open the CT shorting blocks.
3. Apply power to the meter.

© 2008 Schneider Electric. All rights reserved.

Step 8: Set Up Meter Using the Front Panel

Press and hold the **Alt/Enter** button for three (3) seconds to access Basic Setup. This example shows volts mode setup using the meter front panel.

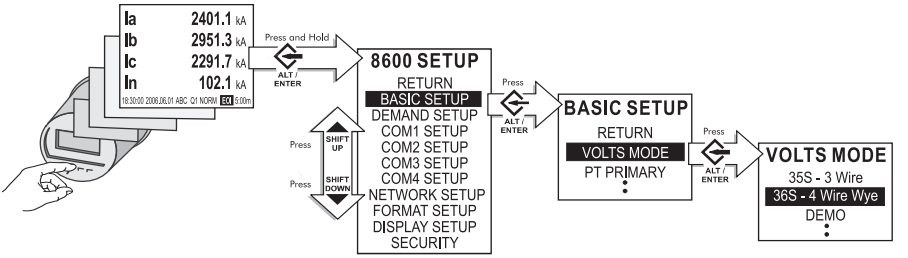

Set up the following:

Menu	Setting	Description	Range (Values)	Default
Basic Setup	Volts Mode	The power system's configuration – WYE, DELTA, etc.	9S 4W-WYE/DELTA 35S 3 Wire 36S 4 W-WYE DEMO	4W-WYE
	PT Primary	The Potential Transformer's primary winding voltage rating	1.0 to 999,999.00	120
	PT Secondary	The Potential Transformer's secondary winding voltage rating	1.0 to 999,999.00	120
	CT Primary	The Current Transformer's primary winding current rating	1.0 to 999,999.00	5
	CT Secondary	The Current Transformer's secondary winding current rating	1.0 to 999,999.00	5
	I4 CT Primary	Primary rating for the I4 current transformer (if available)	1.0 to 999,999.00	5
	I4 CT Secondary	Secondary rating for the I4 current transformer (if available)	1.0 to 999,999.00	5
	VA Polarity	The polarity of the Potential Transformer on VA	Normal or Inverted	Normal
	VB Polarity	The polarity of the Potential Transformer on VB	Normal or Inverted	Normal
	VC Polarity	The polarity of the Potential Transformer on VC	Normal or Inverted	Normal
	IA Polarity	The polarity of the Current Transformer on IA	Normal or Inverted	Normal
	IB Polarity	The polarity of the Current Transformer on IB	Normal or Inverted	Normal
	IC Polarity	The polarity of the Current Transformer on IC	Normal or Inverted	Normal
	I4 Polarity	The polarity of the Current Transformer on I4	Normal or Inverted	Normal
	Phase Rotation	Power system's phase rotation	ABC, ACB	ABC

© 2008 Schneider Electric. All rights reserved.

Menu	Setting	Description	Range (Values)	Default
Demand Setup	SWD Subinterval	Intervals used to compute your Sliding Window Demand values	1 to 5940	600
	SWD # Subintervals	The number of SWD periods in use	10 to 15	3
	SWD Pred Resp		0.00 to 99.00	70
	TD Interval		60 to 5940	900
	TD time const		1.00 to 99.00	90
COM1 Setup	Protocol	Specifies which protocol is active	ION, Modbus RTU, Modbus Master, DNP v3.00, ModemGate, GPS: Truetime/Datum GPS: Arbiter GPS: Arbiter/Vorne Factory, EtherGate	ION
	Baud Rate	Specifies COM port baud rate during serial communications	300 to 115200	9600
	Transmit Delay	Specifies the meter's transmit delay setting	0 to 1.0	0.01
	Unit ID	Identifies the meter during serial communications	1 to 9999	From serial number[1]
	Serial Port	Parity and stop bits for the port	8O1, 8O2, 8N1, 8N2, 8E1, 8E2	8N1
	RS-232 or RS-485	Specifies RS-232 or RS-485	RS-232, RS-485	RS-232
	RTS/CTS Handshake	Specifies if hardware flow control is used during RS-232 communication	RTS with delay, RTS/CTS	RTS with delay
COM2 Setup	Protocol	Specifies which protocol is active	ION, Modbus RTU, DNP v3.00, GPS: Truetime/Datum, GPS: Arbiter, GPS: Arbiter/Vorne, Factory	ION
	Unit ID	Identifies the meter during serial communications	1 to 9999	101
	Baud Rate	Specifies COM port baud rate during serial communications	300 to 57600	9600
	Transmit Delay	Specifies the meter's transmit delay setting	0 to 1.0	0.01
COM3 Setup	Protocol	Specifies the active communications protocol	ION, Modbus RTU, Modbus Master, DNP v3.00, GPS: Truetime/Datum GPS: Arbiter GPS: Arbiter/Vorne Factory	ION
	Unit ID	Identifies the meter during communications	1 to 9999	102
	Serial Port	Parity and stop bits for the port	8O1, 8O2, 8N1, 8N2, 8E1, 8E2	8N1
	Baud Rate	Specifies baud rate during serial communications	300 to 115200[2]	9600

© 2008 Schneider Electric. All rights reserved.

Menu	Setting	Description	Range (Values)	Default
COM4 Setup	Protocol	Specifies the active communications protocol	Same as COM1	ION
	Unit ID	Identifies the meter during communications	1 to 9999	103
	Serial Port	Parity and stop bits for the port	8O1, 8O2, 8N1, 8N2, 8E1, 8E2	8N1
	Baud Rate	Specifies baud rate during serial communications	300 to115200	9600
Network Setup	IP Address	Specifies TCP/IP Ethernet address	000.000.000.000 to 999.999.999.999	None
	Subnet Mask	Specifies Subnet Mask	0.0.0.0 to 255.255.255.0	None
	Gateway	Specifies Ethernet gateway (if used)	000.000.000.000 to 999.999.999.999	None
	SMTP Server	Specifies location of SMTP Server	000.000.000.000 to 999.999.999.999	None
	SMTP Timeout	Specifies connection timeout for the SMTP Server	1 to 60 minutes	1 minute
	MAC Address	Machine Access Control address	hexadecimal	N/A[3]
Format Setup	Phase Labels	Specifies how phases are labelled	123, ABC, RST, XYZ, RYB, RWB	ABC
	PF Symbol	LD (leading)/LG (lagging)	CAP/IND, LD/LG, +/-	LD/LG
	Digit Group	Specifies symbols used to delimit thousands & decimal place holder	1000.0, 1 000.0, 1,000.0	1000.0
	Date Format	Specifies how dates are displayed	YYYY/MM/DD, MM/DD/YYYY, DD/MM/YYYY	MM/DD/YYYY
	Show DST	Specifies whether or not DST is displayed	Do not display DST, Display DST	Display DST
	Volts Decimal	Number of decimal places displayed for voltages	1.X to 123456789.XXX	1.XX
	Current Decimal	Number of decimal places displayed for currents	1.X to 123456789.XXX	1.XX
	Power Decimal	Number of decimal places displayed for power values	1.X to 123456789.XXX	1.XX
Display Setup	Update Rate	Sets when the display updates	1 to 6s (seconds)	1s
	Contrast	Higher numbers are sharper	0 to 9	6
	Backlight TO	How long the front panel display backlight stays on after the last button is pressed	0 to 7200 (seconds)	300
	DMD Lock TO	Minimum time allowed between consecutive demand resets	0 to 5184000 (seconds)	2160000
	Test Mode TO	How long the device remains in test mode before reverting to norm	60 to 21600 (seconds)	1800
	Display Scale	Scale applied to values before they are displayed	1.00 to 999999.0	1000
	Scaling Mode	Specifies if values are divided or multiplied by the Display Scale before being displayed	Multiply or Divide	Divide
	Delta Vectors	Specifies how vector diagrams are displayed when in Delta mode	System or Instrument	Instrument

© 2008 Schneider Electric. All rights reserved.

Menu	Setting	Description	Range (Values)	Default
Security	Modify Passwd	Modifies standard password	0 - 999,999,999	0
	Disable Security	Disables meter security	Proceed	Enabled
	Web Config	Allows configuration through web server interface	Disabled, Enabled	Enabled

[1] The factory set Unit ID for this port is based on the serial number of the meter. For example: Serial number: PABC-000**9**A**263**-10; Unit ID: **9263**.

[2] Optical port performance at baud rates higher than 19200 may not be supported by some optical probe models.

[3] MAC address is factory set and is for reference only.

© 2008 Schneider Electric. All rights reserved.

Step 9: Verify Meter Operation

The LEDs on the side of the meter flash during communications.

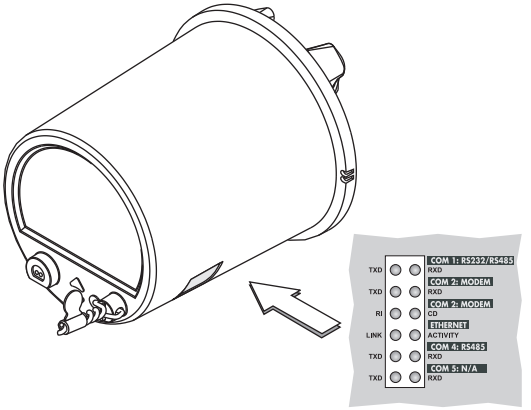

LED	Function
TXD / RXD	Flash = signals are being transmitted and received for serial ports
RI	Ring Indicator (flash = modem rings)
CD	Carrier Detect (on = active connection to modem)
LINK	On = active connection to 10 Base-T Ethernet port
ACTIVITY	Flash = signals are being transmitted and received for Ethernet 10 Base-T

Phasor Diagrams

You can also view the ION8600's phasor diagram in real time. Use the Phasor Viewer available in ION Setup (free download from the website) to verify your meter's wiring. See the ION Setup online help for details.

WYE - ABC Rotation

Applicable Volts Mode: 9S, 4W Wye/Delta and 36S, 4W Delta

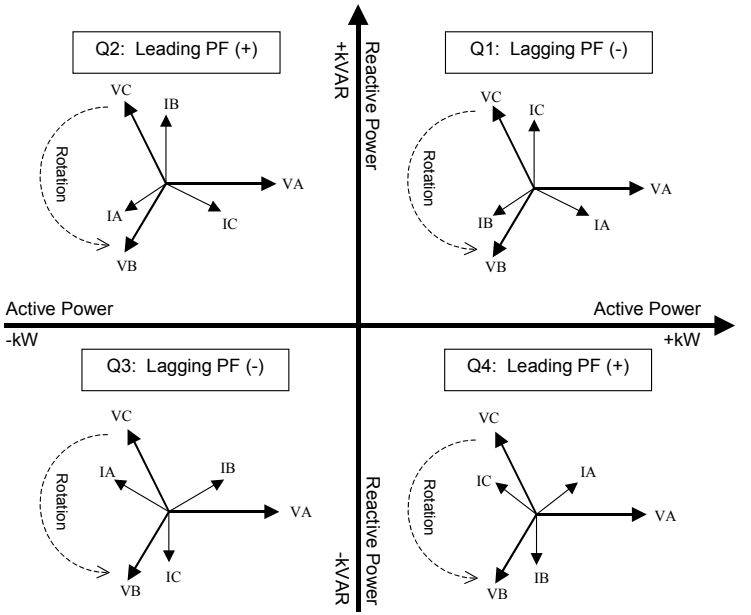

 © 2008 Schneider Electric. All rights reserved.

WYE - ACB Rotation

Applicable Volts Mode = 9S 4W Wye/Delta and 36S 4W WYE

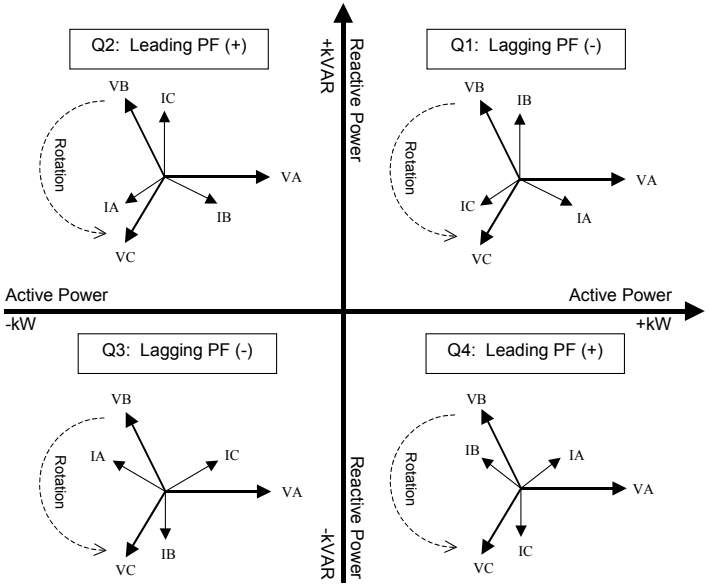

NOTE

The following DELTA phasor diagrams are shown in Instrument mode.

3 Wire Delta - ABC Rotation

Applicable Volts Mode = 35S 3Wire

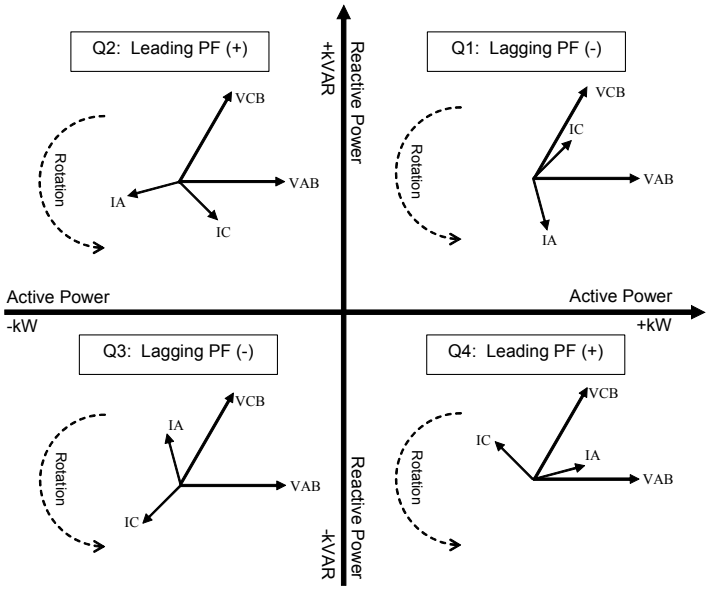

© 2008 Schneider Electric. All rights reserved.

3 Wire Delta - ACB Rotation

Applicable Volts Mode = 35S 3-Wire

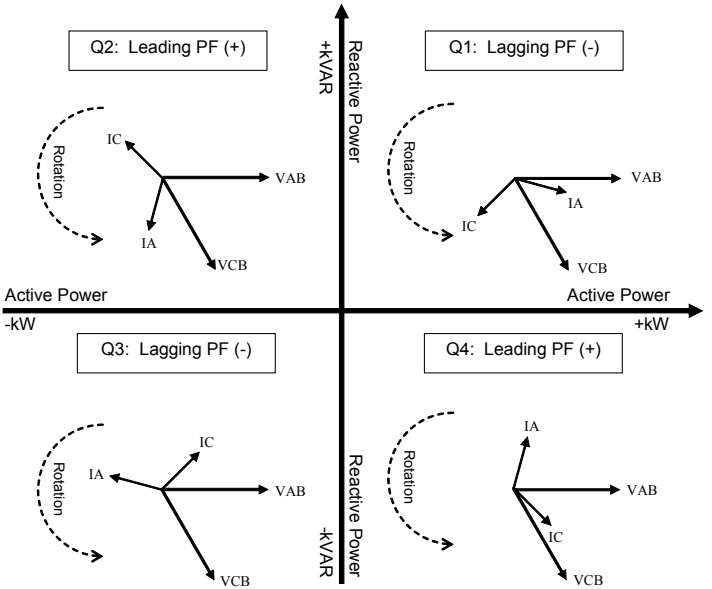

4 Wire Delta (High/Red Leg Delta)

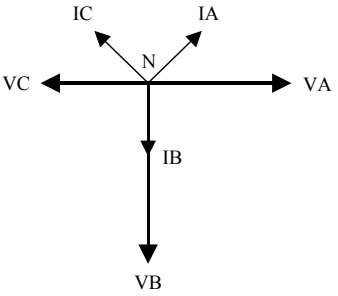

ION8600 Phasor diagram in 9S / 4WYE mode at UNITY PF.

Assuming 3PH phase load is dominant.

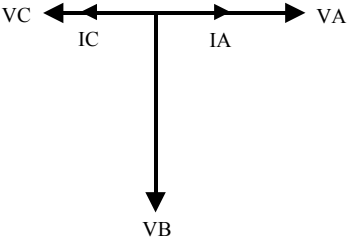

ION8600 Phasor diagram in 9S / 4WYE mode at UNITY PF.

3PH DELTA load is off. Only single phase load.

© 2008 Schneider Electric. All rights reserved.

Step 10: View Meter Data

NORM mode

Use the **Up** and **Down** buttons to scroll through **NORM** mode display screens.

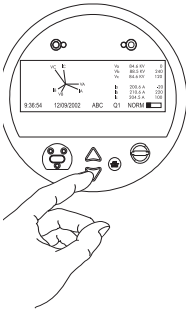

NORM Screen	Contents
kWh	kWh delivered/received
kVARh	kVARh delivered/received
kVAh	kVAh delivered/received
Peak Demand Delivered	Maximum delivered kW value (timestamped)
Peak Demand Received	Maximum received kW value (timestamped)
Peak Demand Reset	Number of Demand Resets (timestamped)
Q Metering	Approximated VARh measurements
Disk Simulator	Simulates mechanical watt-hour meter disk
All Segments	Black screen to indicate functioning display

ALT mode

Press the **Alt/Enter** button once for **ALT** display modes. Press the **Up** or **Down** buttons to scroll through displays.

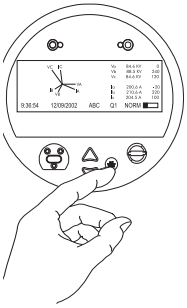

ALT Screen	Contents
Name Plate 1	Owner, firmware version, TAG 1 & 2
Name Plate 2	Sliding window settings
Event Log	Most recent high priority (255) events
Vector Diagram	Phasors and values for phase current/voltage
Instantaneous Voltage	Average voltage, L-N or L-L
Instantaneous Current	Phase current, average current
Instantaneous Power	kW total, kVAR total, kVA total, power factor
Instantaneous Demand	kW delivered/received
Voltage Harmonics (3 screens)	Per-phase voltage harmonic histograms
Current Harmonics (3 screens)	Per-phase current harmonic histograms
Instantaneous Demand	kW td delivered/received

© 2008 Schneider Electric. All rights reserved.

TOU Display Screens	Contents
TOU Energy by Rate	kWh delivered values for each TOU rate
kW Peak Demand	Maximum kW delivered for each TOU rate
Previous Billing Energy	kWh delivered in PB
Prev Billing Peak Demand	Maximum kW delivered in PB
Previous Season Energy	kWh delivered for each TOU rate in PB
Prev Season Peak Demand	Max kW delivered for each TOU rate in PB
Prev Billing/Season Energy	kWh delivered/received in PB & billing season
Prev Bill/Season Pk Dem	Max kW sd received from PB & billing season
Prev Billing/Season Energy	kVARh del/rec in PB & billing season
Prev Bill/Season Pk Demand	kVAR del/rec in PB & billing season
Prev Billing/Season Energy	kVAh del/rec from PB & billing season
Pre Bill/Season Pk Demand	kVA del/rec in PB & billing season
Active TOU Rate	Active TOU billing rate
Active TOU Season	Active TOU billing season
Flicker	Flicker measurements from V1, V2 & V3
Frequency	Frequency information

NOTE

PB = Previous Billing period.

TEST Mode

TEST Screen	Contents
kWh Test	TEST mode kWh delivered/received
kVARh/KVAh Test	TEST mode kVARh/KVAh delivered/received
Instantaneous Demand Test	TEST mode kW delivered/received

To Enter TEST Mode

Meter Type	Method
Standard Meter (no hardware lock)	Use ION software
	Remove outer cover and press TEST mode button (see “Meter Overview” on page 6)
Hardware Locked Meter	Remove outer cover and press TEST mode button (see “Meter Overview” on page 6)

NOTE

The meter always returns to NORM mode after exiting TEST mode.

 © 2008 Schneider Electric. All rights reserved.

PowerLogic™ ION8600
Installation Guide

For further assistance
please contact us at:

Schneider Electric
Power Monitoring and Control
2195 Keating Cross Road
Saanichton, BC
Canada V8M 2A5
Tel: 1-250-652-7100

295 Tech Park Drive, Suite 100
Lavergne, TN 37086
USA
Tel: 1-615-287-3400

Electropole (38 EQI)
31, rue Pierre Mendès France
F - 38050 Grenoble Cédex 9
Tel : + 33 (0) 4 76 57 60 60

Getting technical support:
Contact your local Schneider Electric sales representative for assistance or go to the www.global.powerlogic.com website.

ION, ION Enterprise, MeterM@il, Modbus, Power Measurement, PowerLogic, Schneider Electric, Square D and WebMeter are either trademarks or registered trademarks of Schneider Electric in France, the USA and other countries. All other trademarks are property of their respective owners.

Electrical equipment should be installed, operated, serviced, and maintained only by qualified personnel. No responsibility is assumed by Schneider Electric for any consequences arising out of the use of this material.

70002-0266-11
© 2008 Schneider Electric. All rights reserved.
09/2008