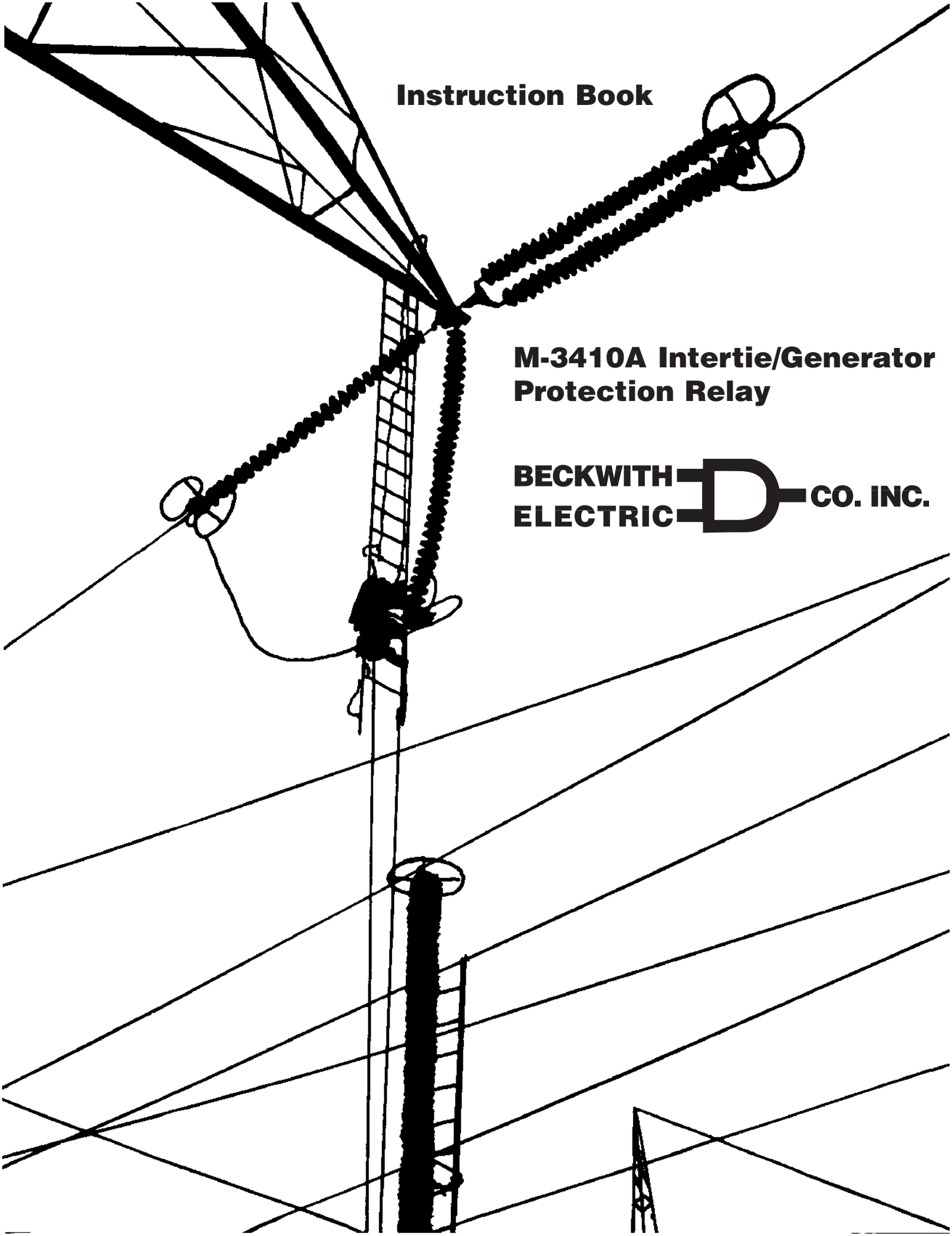

Instruction Book

M-3410A Intertie/Generator Protection Relay

BECKWITH ELECTRIC CO. INC.

BECKWITH ELECTRIC CO. INC.

Intertie/Generator Protection Relay M-3410A

Integrated Protection System®

M-3410A Standard Panel

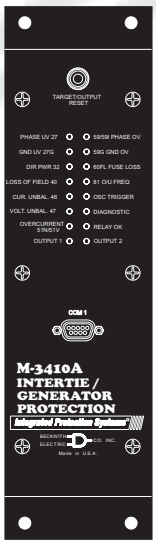

M-3410A Vertical Panel (Optional)

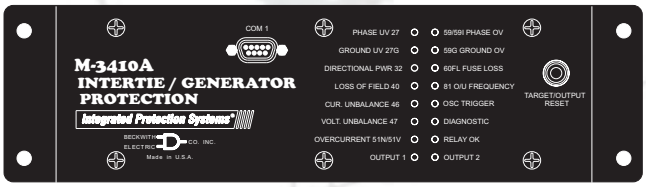

M-3410A Horizontal Panel (Optional)

- **Available in four different Mounting configurations**
- **Facilitates standardization for small/medium intertie and generator protection applications**
- **Microprocessor-based relay provides 15 protective relay functions, including Sync-Check, 2 programmable outputs and 2 programmable inputs**
- **Relay voltage inputs can be directly connected (no VT required) for voltages 480 V or less**
- **Local and remote serial communications (MODBUS protocol) capability for monitoring and control functions**

Industry Leader Since 1969
Made in the USA

This Page Left Intentionally Blank

Protective Functions

- Sync-check with Phase Angle, ΔV and ΔF with dead line/dead bus options (25)
- Phase undervoltage (27) protection
- Ground undervoltage (27G) protection
- Dual-setpoint, single or three phase, directional power detection that can be selected as over/under power protection (32)
- Dual-zone, offset-mho loss-of-field for generator protection (40)
- Sensitive negative sequence overcurrent protection and alarm (46)
- Negative sequence overvoltage (47)
- Inverse time neutral overcurrent (51N)
- Phase overcurrent with voltage restraint/control (51V) protection
- Phase overvoltage (59) protection
- Ground overvoltage (59G) protection
- Peak overvoltage (59I) protection
- VT fuse-loss detection and blocking (60FL)
- Reconnect enable for intertie protection (79)
- Four-step over/under frequency (81) protection

Standard Features

- 2 programmable outputs, 2 programmable inputs, and 1 self-test output
- Oscillographic recording (COMTRADE file format)
- Time-stamped sequence of events recording for 32 events
- Metering of Voltage, Current, real and reactive Power, Power Factor, Frequency, and Positive Sequence Impedance
- One RS-232 port (COM1) on front and one RS-232 or 485 port (COM2) on rear
- M-3810A IPScom® For Windows™ Communications Software
- MODBUS protocol
- Supports both 50 and 60 Hz applications
- Accepts 1A or 5 A rated CT inputs
- Relay voltage inputs can be directly connected (no VT required) for voltages ≦ 480 V ac
- Continuous Self-Diagnostics

Optional Features

- M-3801D IPSplot® *PLUS* Oscillograph Analysis Software
- Horizontal and Vertical panel mount versions available (see Figures 7, 9 and 10)
- Standard 19" Rack Mount Available (See Figure 8)
- Surface Mount Version available (See Figure 11)
- Adapter Plate available for M-0290 and M-0296 Pride protection relay replacement

PROTECTIVE FUNCTIONS

Device Number	Function	Setpoint Ranges	Increment	Accuracy
	Sync Check			
25	Phase Angle Window	0° to 90°	1°	±1°
	Upper Voltage Limit	100.0 to 120.0%*	0.1%	±0.5 V or ±0.5%
	Lower Voltage Limit	70.0 to 100.0%*	0.1%	±0.5 V or ±0.5%
	Delta Voltage Limit	1.0 to 50.0%*	0.1%	±0.5 V
	Delta Frequency Limit	0.001 to 0.500 Hz	0.001 Hz	±0.001 Hz or 5%
	Sync Check Time Delay	1 to 8160 Cycles	1 Cycle	
	Dead Voltage Limit	0.0 to 50.0%*	0.1%	±0.5 V or ±0.5%
	Dead Time Delay	1 to 8160 Cycles	1 Cycle	±2 Cycles

** Of nominal voltage.*

Sync Check may be operated as a stand-alone function or supervised by 79 (reconnect). Various combinations of input supervised hot/dead closing schemes may be selected. This function can only be enabled in line-to-line VT configuration and when functions 27G and 59G are not enabled.

	Phase Undervoltage			
27	Pickup #1, #2	4 to 100%*	0.1%	±0.5 V or ±0.5%
	Time Delay #1, #2	1 to 8160 Cycles	1 Cycle	±2 Cycles**

** Of nominal voltage.*

*** When DFT is selected, the time delay accuracy is ±2 cycles. When RMS magnitude is selected, an additional time delay from 0 to +20 cycles may occur.*

	Ground Undervoltage			
27G	Pickup	4 to 100%*	1 %	±0.5 V or ±0.5%
	Time Delay	1 to 8160 Cycles	1 Cycle	±2 Cycles

** Of nominal voltage, maximum of 600 V.*

This function can only be enabled when the relay is configured in line-to-line VT and the 25 function is not enabled.

	Directional Power			
32	Pickup #1, #2	–3.00 to +3.00 PU	0.01 PU	±0.02 PU or ±2%*
	Time Delay #1, #2	1 to 8160 Cycles	1 Cycle	±2 Cycles

The per-unit pickup is based on nominal VT secondary voltage and nominal CT secondary current settings for currents less than 14 A (2.8 A). This function can be selected as overpower or underpower in the forward direction (positive setting) or reverse direction (negative setting). This function can also be selected for single phase detection for line-to-ground VT.

Minimum sensitivity of 100 mA for 5 A CT (real component of current).

** Accuracy applies for a nominal current range of 2.5 A to 6 A (5 A CT) or 0.5 A to 1.5 A (1 A CT).*

Values in parentheses apply to 1 A CT secondary rating.

PROTECTIVE FUNCTIONS (*cont.*)

Device Number	Function	Setpoint Ranges	Increment	Accuracy
	Loss-of-Field (dual-zone offset-mho characteristic)			
40	Circle Diameter #1, #2	0.01 to 3.00	0.01 PU	±0.01 PU or ±5%**
	Offset #1, #2	–2.0 to 2.0	0.01 PU	±0.01 PU or ±5%**
	Time Delay #1, #2	1 to 8160 Cycles	1 Cycle	±2 Cycles
27	Voltage Control (positive sequence)	4 to 100%*	0.1%	±0.5 V or K0.5%
	Directional Element	Fixed at –13°	—	—

** Of nominal voltage.*

*** Accuracy applies for a nominal current range of 2.5 A to 6 A (5 A CT) or 0.5 A to 1.5 A (1 A CT).*

	Negative Sequence Overcurrent			
46	**Definite Time**			
	Pickup	3% to 300%*	1%	±0.1 A or ±0.5%** (±0.02 A or ±0.5%)
	Time Delay	1 to 8160 Cycles	1 Cycle	±2 Cycles
	Inverse Time			
	Pickup	3% to 100%*	0.1%	±0.1 A or ±3%** (±0.02 A or ±3%)
	Characteristic Curves	Definite Time/Inverse Time/Very Inverse/Extremely Inverse/IEC/I_2^2t=K		
	Time Dial Setting	0.5 to 11.0 0.05 to 1.1 (IEC) 1 to 95 (I_2^2t=K)	0.1 0.01 1	±3 Cycles or ±10%**
	For I_2^2t=K Curve Only			
	Definite Maximum Time to Trip	600 to 65,500 Cycles	1 Cycle	±3 Cycles or ±10%**
	Reset Time (Linear)	4 minutes (from threshold of trip)		

** Of nominal current for currents less than 14 A (2.8 A).*

*** Accuracy applies for a nominal current range of 2.5 A to 6 A (5 A CT) or 0.5 A to 1.5 A (1 A CT), and for a pickup of >5%.*

	Negative Sequence Overvoltage			
47	Pickup #1, #2	4 to 100%*	0.1%	±0.5 V or ±0.5%
	Time Delay #1, #2	1 to 8160 Cycles	1 Cycle	±2 Cycles

** Of nominal voltage.*

	Inverse Time Residual Overcurrent			
51N	Pickup	0.50 to 6.00 A (0.10 to 1.20 A)	0.1 A	±0.1 A or ±3% (±0.02 A or ±3%)
	Characteristic Curves	Definite Time/Inverse Time/Very Inverse/Extremely Inverse/IEC		
	Time Dial			
	Standard Curves #1–#4	0.5 to 11.0	0.1	±3 Cycles or ±10%
	IEC Curves #1–#4	0.05 to 1.10	0.01	

Values in parentheses apply to 1 A CT secondary rating.

PROTECTIVE FUNCTIONS (*cont.*)

Device Number	Function	Setpoint Ranges	Increment	Accuracy
	Inverse Time Overcurrent, with Voltage Control or Voltage Restraint			
51V	Pickup	0.50 to 12.00 A (0.10 to 2.40 A)	0.01 A	±0.1 A or ±3% (±0.02 A or ±3%)
	Characteristic Curve	Definite Time/Inverse/Very Inverse/Extremely Inverse/IEC Curves		
	Time Dial	0.5 to 11.0 0.05 to 1.10 (IEC curves)	0.1 0.01	±3 Cycles or ±10%
	Voltage Control (VC)	4.0 to 150.0%*	0.1%	±0.5 V or ±0.5%
	or Voltage Restraint (VR)	Linear Restraint	—	—

** Of nominal voltage.*

	Phase Overvoltage			
59	Pickup #1, #2	100 to 150%*	0.1%	±0.5 V or ±0.5%
	Time Delay #1, #2	1 to 8160 Cycles	1 Cycle	±2 Cycles**

** Of nominal voltage.*

*** When DFT is selected, the time delay accuracy is ±2 cycles. When RMS magnitude is selected, an additional time delay from 0 to +20 cycles may occur.*

	Ground Overvoltage			
59G	Pickup	4 to 150%*	1%	±0.5 V or ±0.5%
	Time Delay	1 to 8160 Cycles	1 Cycle	±2 Cycles

** Of nominal voltage.*

This function can only be enabled when the relay is configured in line-to-line VT and the 25 function is not enabled.

	Peak Overvoltage			
59I	Pickup	100 to 150%*	1%	±3%**
	Time Delay	1 to 8160 Cycles	1 Cycle	±3 Cycles

**Instantaneous voltage magnitude response; intended for ferroresonance protection.*

***For fundamental (60 Hz/50 Hz) signal only. For distorted input signals, the accuracy degrades as the order of the harmonic signal increases.*

	VT Fuse-Loss Detection			
60 FL	A VT fuse-loss condition is detected by using the positive and negative sequence components of the voltages and currents. VT fuse-loss output can be initiated from internally generated logic or from input contacts.			
	Time Delay	1 to 8160 Cycles	1 Cycle	±2 Cycles

	Reconnect Enable Time Delay			
79	Time Delay	2 to 65,500 Cycles	1 Cycle	±2 Cycles

Reconnect timer starts when all outputs designated as trip outputs reset.

Values in parentheses apply to 1 A CT secondary rating.

PROTECTIVE FUNCTIONS (*cont.*)

Device Number	Function	Setpoint Ranges	Increment	Accuracy
	Over/UnderFrequency			
81	Pickup #1, #2, #3, #4	50.00 to 67.00 Hz (40.00 to 57.00 Hz*)	0.01 Hz	±0.03 Hz
	Time Delay #1,#2, #3, #4	2 to 65,500 Cycles	1 Cycle	±2 Cycles or ±0.01%

**This range applies to 50 Hz nominal frequency models.*

The pickup accuracy applies to 60 Hz models at a range of 57 to 63 Hz, and to 50 Hz models at a range of 47 to 53 Hz. The accuracy is ±0.15 Hz for a range of 52 to 57 Hz, and 63 to 67 Hz (for 60 Hz nominal) and 42 to 47 Hz and 53 to 57 Hz (for 50 Hz nominal).

	Nominal Settings			
	Nominal Voltage	50 to 500 V*	1 V	—
	Nominal Current	0.50 to 6.00 A	0.01 A	—
	VT Configuration	Line-Line/Line-Ground/Line-Ground-to-Line-Line**		
	Seal-in Delay	2 to 8160 Cycles	1 Cycle	±1 Cycle or ±1%

** Maximum measured range for (25), (59), (59G) and (59I) function settings is ≤ 600 V.*

*** When line-ground-to-line-line is selected, the relay internally calculates the line-line voltage from the line-ground voltages for all voltage-sensitive functions. When line-ground-to-line-line selection is applied, the nominal voltage selection should be the line-line nominal voltage (not line-ground nominal voltage).*

Values in parentheses apply to 1 A CT secondary rating.

Description

The M-3410A Intertie/Generator Protection Relay is intended for the protection of the intertie between the utility and dispersed generation. It is also suitable for the protection of synchronous and induction generators. Communications and control features of the M-3410A are accomplished utilizing the M-3810A IPScom® For Windows™ Communications Software.

Metering

The relay provides metering of voltages, currents, real power, reactive power, power factor, frequency and positive sequence impedance.

Metering Accuracies are:

Voltage: ±0.5 V or ±0.5%, whichever is greater (Range 0 to 600 V)

Current: 5 A rating, ±0.1 A or ±3%, whichever is greater (Range 0 to 14 A)
1 A rating, ±0.02 A or ±3%, whichever is greater (Range 0 to 2.8 A)

Power: ±0.02 PU or ±2%, whichever is greater

Frequency: ±0.03 Hz (from 57 to 63 Hz for 60 Hz models; from 47 to 53 Hz for 50 Hz models)

Oscillographic Recorder

The oscillographic recorder provides comprehensive data recording of all monitored waveforms, input contacts and output contacts, storing up to 120 cycles of data. The total record length is configured for one or two partitions. A programmable post trigger delay (5 to 95%) is incorporated to capture breaker operation. The oscillograph is triggered either remotely using the serial interface, or designated status input signals or M-3410A programmable output operations. Storage of oscillographic records is nonvolatile, and will be retained even without power, as long as the on-board battery is healthy.

Oscillographic data can be downloaded using serial communication in Common Format For Transient Data Exchange (COMTRADE) format as specified by IEEE Standard C37.111-1999.

Sequence of Events

A total of 32 nonvolatile events can be stored. The recorded information includes the function(s) operated, the function(s) picked up, input/output contact status and time stamp. The events can be retrieved through the communications port. After the 32nd event is stored, additional events result in the oldest event being dropped (FIFO). The information is time-stamped to 1 ms resolution.

Calculations

Current and Voltage Values: Uses discrete Fourier transform (DFT) algorithm on sampled (32 times per cycle) voltage and current signals to extract fundamental frequency phasors for calculations. The 59/27 function, when set for RMS measurement, uses a time domain algorithm to calculate the voltage magnitude.

Power Input Options

Nominal	Range	Burden
12/24 V dc	9 to 36 V dc	<5 VA
48 V dc	36 to 75 V dc	<5 VA
120 V ac/125 V dc	85 to 150 V ac/V dc	<7 VA

Sensing Inputs

3 Voltage Inputs: Rated nominal voltage of 69 V ac to 480 V ac, 60 Hz (50 Hz user configurable). Will withstand 600 V continuous voltage. Source voltages may be line-to-ground or line-to-line connected. Phase sequence ABC/ACB is selectable. Voltage transformer burden less than 0.25 VA at 120 V ac.

3 Current Inputs: Rated current (I_R) of 5.0 A or 1.0 A, 60 Hz (50 Hz user configurable). Will withstand $2I_R$ continuous current and 30 I_R for 2 seconds. Current transformer burden is less than 0.75 VA at 5 A for 5 A inputs, 0.3 VA at 1 A for 1 A inputs.

Control/Status Inputs

The control/status inputs, INPUT1 and INPUT2, can be programmed to block any of the M-3410A functions and trigger the oscillograph recorder. The control/status inputs accept only dry contacts and are internally wetted (9 V dc) by the relay's power supply. A minimum current of 1.3 mA is required to avoid spurious triggering of the input.

Output Contacts

The two programmable output relays, each with a contact are rated as per ANSI/IEEE C37.90-1989 for tripping: make 30 A for 0.2 seconds. Available hardware configurations include two normally open (Option B1), one normally open and one normally closed (Option B2), or two normally closed (Option B3) contacts. The contacts will carry 8 A, break 6 A at 120 V ac, break 0.1 A at 125 V dc, inductive break 0.1 A. Also provided is a self-test alarm output contact (form 'c') with a rating of 8 A at 120 V ac, 5 A at 30 V dc, 125 V dc 0.15 A resistive, 0.1 A inductive.

Any of the M-3410A protective functions can be individually programmed to activate the two programmable outputs. The user can configure the two programmable outputs to either energize or de-energize to issue an output command.

The outputs (excluding the self-test) can have two modes of operation, LATCHING and NORMAL. The LATCHING mode requires an operator intervention to deactivate the outputs after the condition for operation has been removed. In the NORMAL mode, when the condition for tripping has been removed, the output(s) will deactivate automatically after the corresponding seal-in timers have expired.

Target/Status Indicators and Controls

The **RELAY OK** LED reveals proper cycling of the microprocessor. The **DIAGNOSTIC** LED provides indication of the error code (when flashing). The **OSC TRIGGER** LED indicates that the oscillograph has been triggered. The remaining eleven LEDs are used to indicate which protective function(s) have been tripped. **OUTPUT 1** and **OUTPUT 2** are used to indicate the status of the output contacts. The output LEDs will illuminate when the output contact relays are tripped. The **TARGET/OUTPUT RESET** button resets the target LEDs if the conditions causing the operation have been removed. Holding the **TARGET/OUTPUT RESET** button displays the present pickup status of the M-3410A functions. The **TARGET/OUTPUT RESET** button will deactivate the tripped output contact if the **LATCHING** mode was selected. (If the seal in timer has already expired, the output contact will deactivate immediately.)

Communication

Communications ports include a front panel RS-232 port and a rear port user configurable to RS-232 or RS-485. The RS-232 ports are connected physically with a DB-9 connector and the RS-485 port utilizes 4-wire interface mounting screw terminals.

M-3810A IPScom® For Windows™ Communications Software utilizing the MODBUS communications protocol in RTU mode, implements serial, byte-oriented asynchronous communication with the M-3410A and provides the following functions:

- Interrogation and modification of setpoints
- Time-stamped sequence of events information for the 32 most recent events
- Real-time metering of all quantities measured
- Downloading of recorded oscillographic data
- Relay Setup

Tests and Standards

The M-3410A Generator/Intertie Protection Relay complies with the following type tests and standards:

Voltage Withstand

Dielectric Withstand

All terminals except power supply and status input contacts, 2500 V ac/3500 V dc
Power Supply and Status Input Contacts:

IEC 60255-5	1,500 V dc for power supply voltages (12, 24, 48 V inputs)
	2500 V ac/3500 V dc for power supply voltages (120 V ac/125 V dc input)

Impulse Voltage

Power Supply Input Voltages, 120 V ac/125 V dc:

IEC 60255-5	5,000 V pk, +/- polarity applied to each independent circuit to earth
	5,000 V pk, +/- polarity applied between independent circuits
	1.2 µs by 50 µs, 500 ohms impedance, three surges at every 5 second interval

Power Supply Input Voltages, 12, 24, 48 V dc:

IEC 60255-5	3,000 V pk, +/- polarity applied to each independent circuit to earth
	3,000 V pk, +/- polarity applied between independent circuits
	1.2 µs by 50 µs, 500 ohms impedance, three surges at every 5 second interval

Insulation Resistance

IEC 60255-5 > 100 Megaohms

Electrical Environment

Electrostatic Discharge Test

IEC 61000-4-2 Class 4 (±8 kV) - point contact discharge and air discharge

Fast Transient Disturbance Test

IEC 61000-4-4	(±2 kV, 5 kHz) AC Power Supply Input
	(±1 kV, 5 kHz) RS-232, RS-485 and ground

Surge

IEC 61000-4-5	(±2 kV, 1.2 µs by 50 µs line to ground) AC Power Supply Input
	(±1 kV, 1.2 µs by 50 µs line to line) AC Power Supply Input
	(±1 kV, 1.2 µs by 50 µs line to ground) RS-485 Port

Surge Withstand Capability

ANSI/IEEE	2,500 V pk-pk Oscillatory each independent circuit to earth
C37.90.1	2,500 V pk-pk Oscillatory between each independent circuit
1989	5,000 V pk Fast Transient each independent circuit to earth
	5,000 V pk Fast Transient between each independent circuit

ANSI/IEEE	2,500 V pk-pk Oscillatory applied to each independent circuit to earth
C37.90.1	2,500 V pk-pk Oscillatory applied between each independent circuit
2002	4,000 V pk Fast Transient burst applied to each independent circuit to earth
	4,000 V pk Fast Transient burst applied between each independent circuit

■ **NOTE**: The signal is applied to the digital data circuits (RS-232 and RS-485) through capacitive coupling clamp.

Radiated Susceptibility

ANSI/IEEE C37.90.2 1995	25-1000 Mhz @ 35V/m

Output Contacts

ANSI/IEEE C37.90.0 1989	Make 30 A for 0.2 seconds, off for 15 seconds for 2,000 operations Section 6.7.1, Tripping Output Performance Requirements

Atmospheric Environment

Temperature

IEC 60068-2-1	Cold, –20° C
IEC 60068-2-2	Dry Heat, +70° C
IEC 60068-2-3	Damp Heat, +40° C @ 93% RH

Mechanical Environment

Vibration

IEC 60255-21-1	Vibration response Class 1, 0.5 g Vibration endurance Class 1, 1.0 g

Shock

MIL-STD-810C Method 516.2, Procedure 1, 11 ms, 15 g, 1/2 sine pulse, 3 pulses per axis

Compliance

UL-Listed per 508 – Industrial Control Equipment
UL Listed Component per 508A Table SA1.1 Industrial Control Panels
CSA-Certified per C22.2 No. 14-95 – Industrial Control Equipment
CE Safety Directive – EN61010-1-1993, CAT II, Pollution Degree 2

Physical

Panel Mount

Size: 12.20" high x 12.00" wide x 2.56" deep (30.99 cm x 30.48 cm x 7.27 cm)
Approximate Weight: 5 lbs, 11 oz (2.11 kg)
Approximate Shipping Weight: 9 lbs, 13 oz (4.48 kg)

Horizontal/Vertical Panel Mount

Size: 3.46" high x 10.50" wide x 11.63" deep (8.8 cm x 26.7 cm x 29.54 cm)
Approximate Weight: 6 lbs, 4 oz (2.84 kg)
Approximate Shipping Weight: 10 lbs, 4 oz (4.7 kg)

19" Rack Mount

Size: 3.46" high x 19.0" wide x 11.63" deep (8.8 cm x 48.26 cm x 29.54 cm)
Approximate Weight: 6 lbs, 15 oz (3.14 kg)
Approximate Shipping Weight: 10 lbs, 15 oz (4.96 kg)

M-0290 and M-0296 Adapter Plate

Size: 17.25" high x 7.31" wide x 11.63" deep (43.82 cm x 18.57 cm x 29.54 cm)
Approximate Weight: 7 lbs, 4 oz (3.23 kg)
Approximate Shipping Weight: 11 lbs, 15 oz (5.41 kg)

Recommended Storage Parameters

Temperature: 5° C to 40° C

Humidity: Maximum relative humidity 80% for temperatures up to 31° C, decreasing to 31° C linearly to 50% relative humidity at 40° C.

Environment: Storage area to be free of dust, corrosive gases, flammable materials, dew, percolating water, rain and solar radiation.

See M-3410A Instruction Book, Appendix F, Layup and Storage for additional information.

Patent & Warranty

The M-3410A Generator/Intertie Protection Relay is covered by U.S. Patent 5,592,393.

The M-3410A Generator/Intertie Protection Relay is covered by a five year warranty from date of shipment.

External Connections

M-3410A external connection points are illustrated in Figure 1, Standard Panel Layout External Connections and Figure 2 for the optional Horizontal and Vertical Panel External Connection Layouts.

Specification is subject to change without notice.

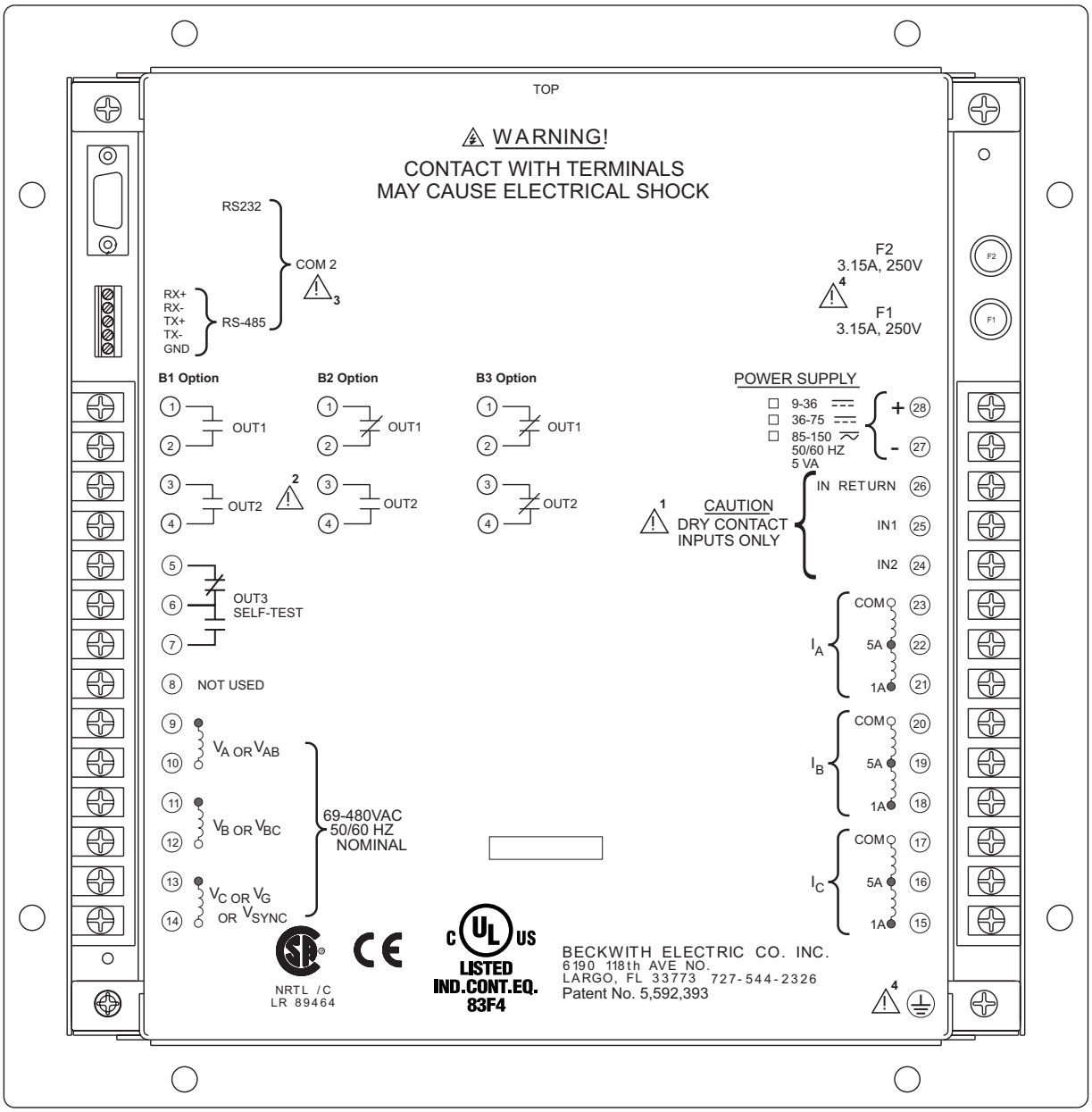

Figure 1 Standard Panel Layout External Connections

■ **NOTES**:

1. See M-3410A Instruction Book, Section 2.3, External Connections.
2. See M-3410A Instruction Book, Section 3.1, Relay Configuration, Output Contact Mode.
3. See M-3410A Instruction Book, Section 2.9, Relay Remote Communication Setup (PC), COM2 Configuration.
4. See M-3410A Instruction Book, Section 2.3, External Connections.

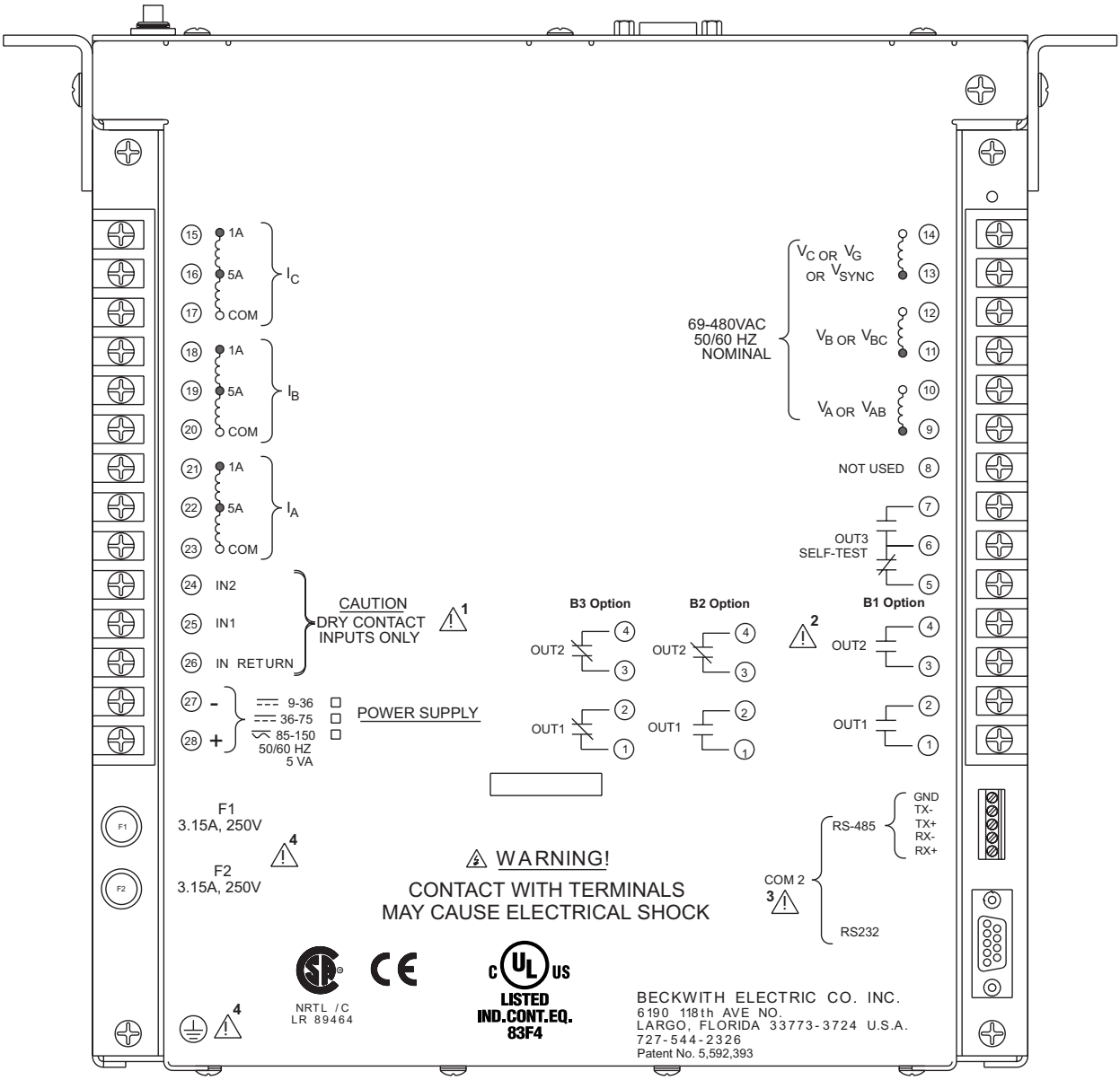

Figure 2 Optional Horizontal and Vertical Mount Panel External Connection Layout

■ **NOTES**:

1. See M-3410A Instruction Book, Section 2.3, External Connections.
2. See M-3410A Instruction Book, Section 3.1, Relay Configuration, Output Contact Mode.
3. See M-3410A Instruction Book, Section 2.9, Relay Remote Communication Setup (PC), COM2 Configuration.
4. See M-3410A Instruction Book, Section 2.3, External Connections.

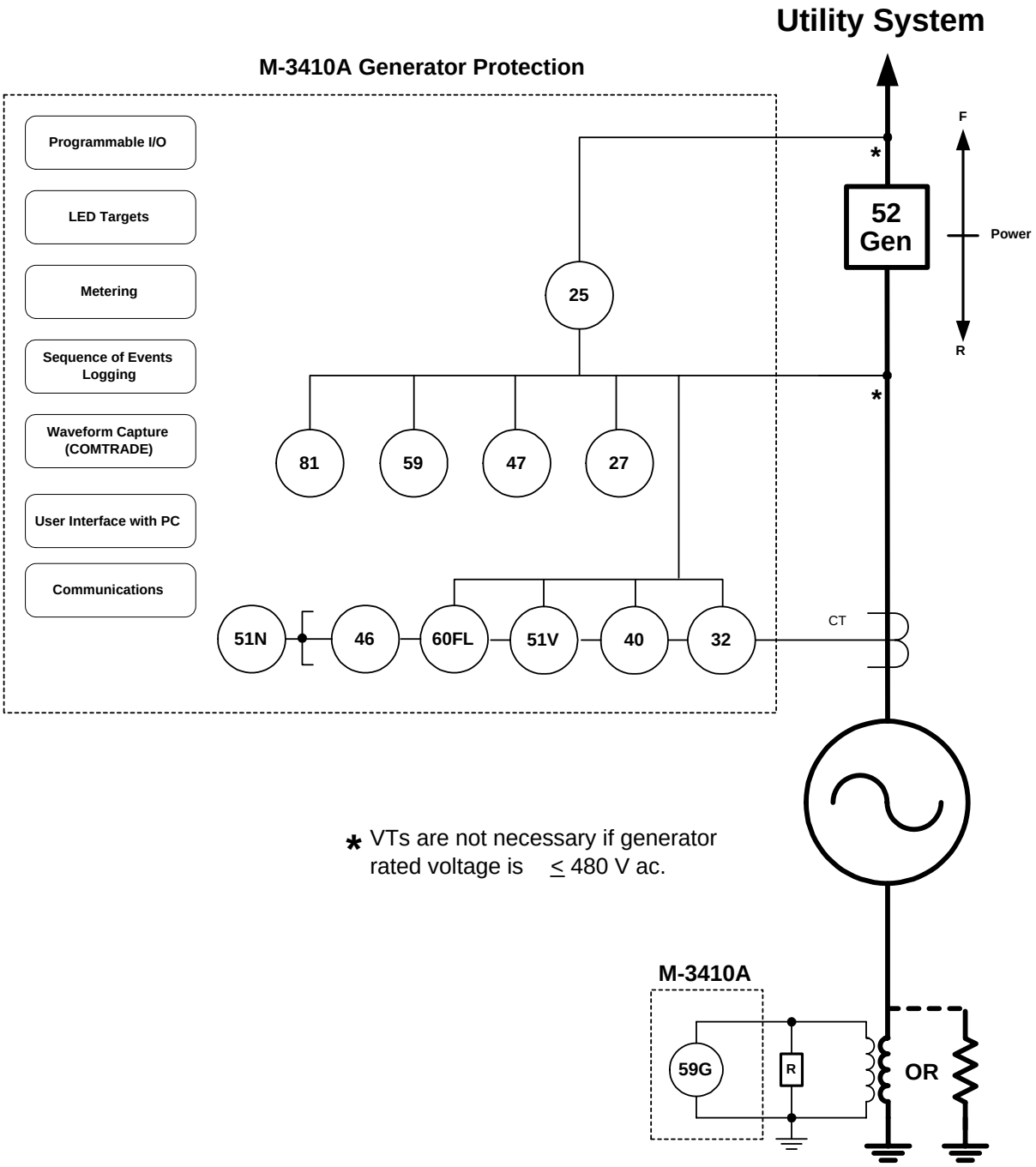

Figure 3 Typical One-Line Diagram–Generator Protection

■ **NOTES**:

1. The 59G protective function is only available when the relay is configured to use line-to-line VTs and the 25 function is not enabled.
2. The 25 protective function is only available when the relay is configured to use line-to-line VTs and the 59G function is not enabled.
3. The 32 protective function in single phase detection mode is only available when the relay is configured to use line-to-ground VT.

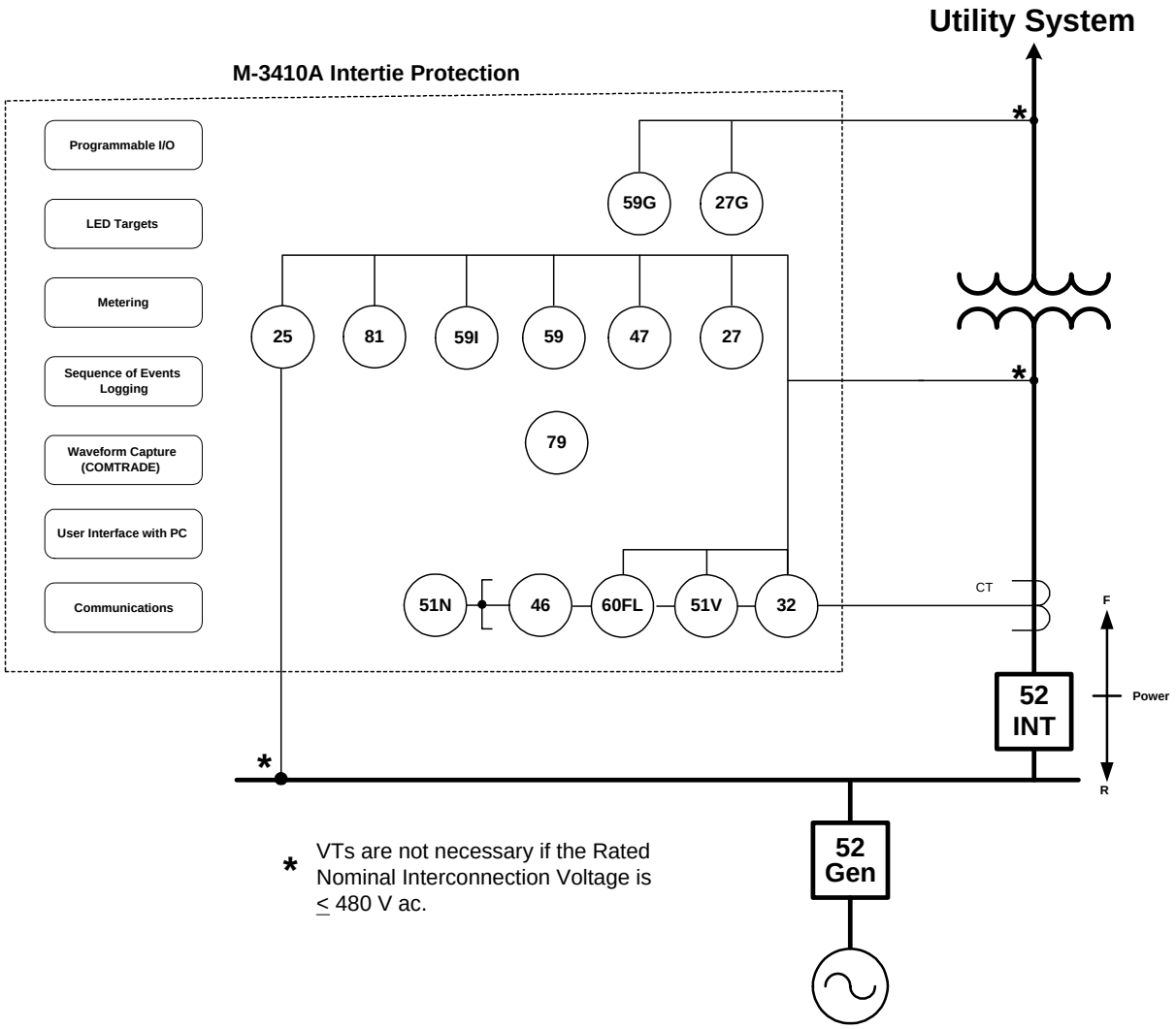

Figure 4 Typical One-Line Diagram–Intertie Protection

■ **NOTES**:

1. The 27G and 59G protective functions are only available when the relay is configured to use line-to-line VTs and the 25 function is not enabled.
2. The 25 protective function is only available when the relay is configured to use line-to-line VTs and the 27G and 59G functions are not enabled.
3. The 32 protective function in single phase detection mode is only available when the relay is configured to use line-to-ground VTs.

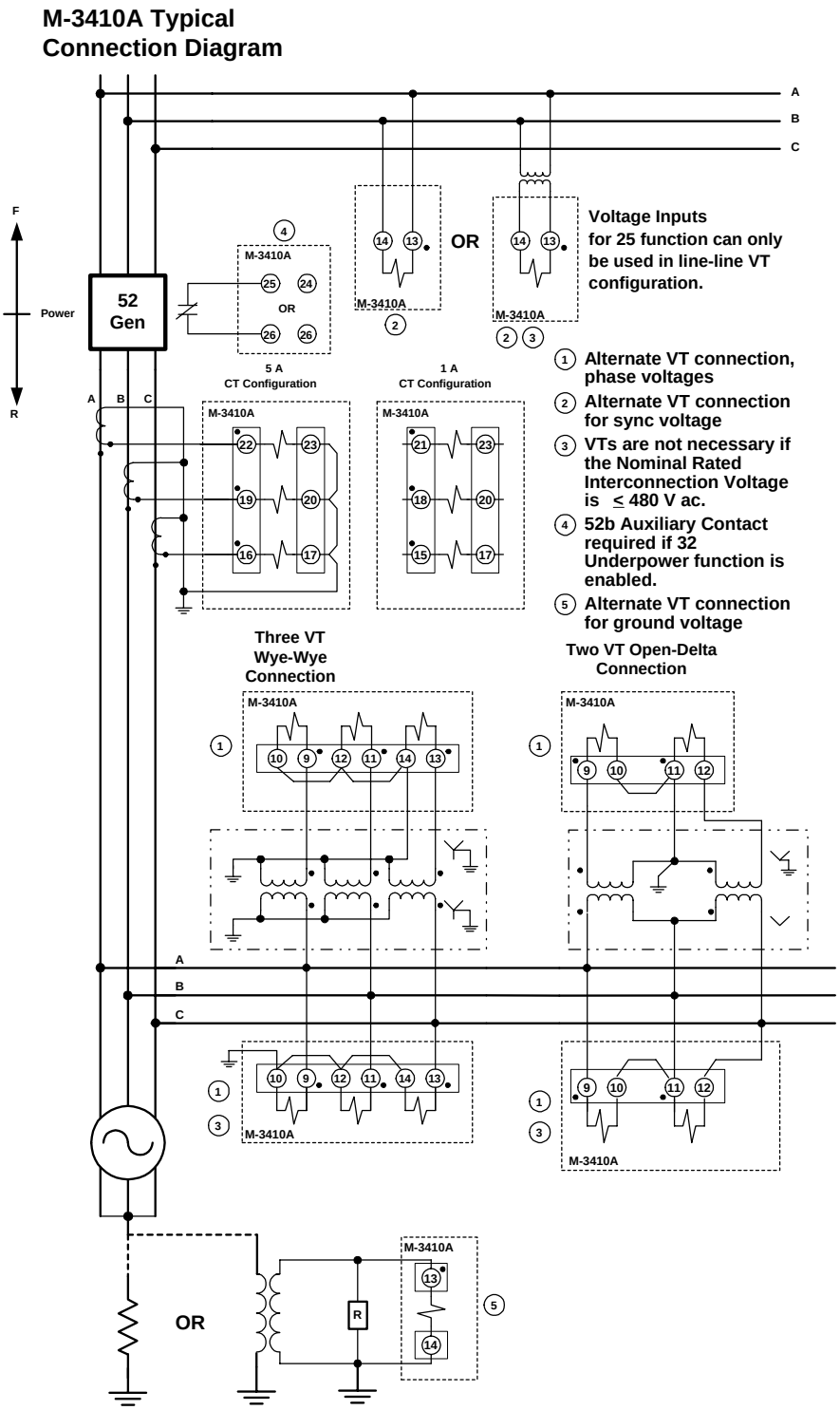

Figure 5 Typical Three-Line Diagram–Generator Protection

■ **NOTES**:

1. The 59G protective function is only available when the relay is configured to use line-to-line VTs and the 25 function is not enabled.
2. The 25 protective function is only available when the relay is configured to use line-to-line VTs and the 59G function is not enabled.
3. The 32 protective function in single phase detection mode is only available when the relay is configured to use line-to-ground VTs.

M-3410A Typical Connection Diagram

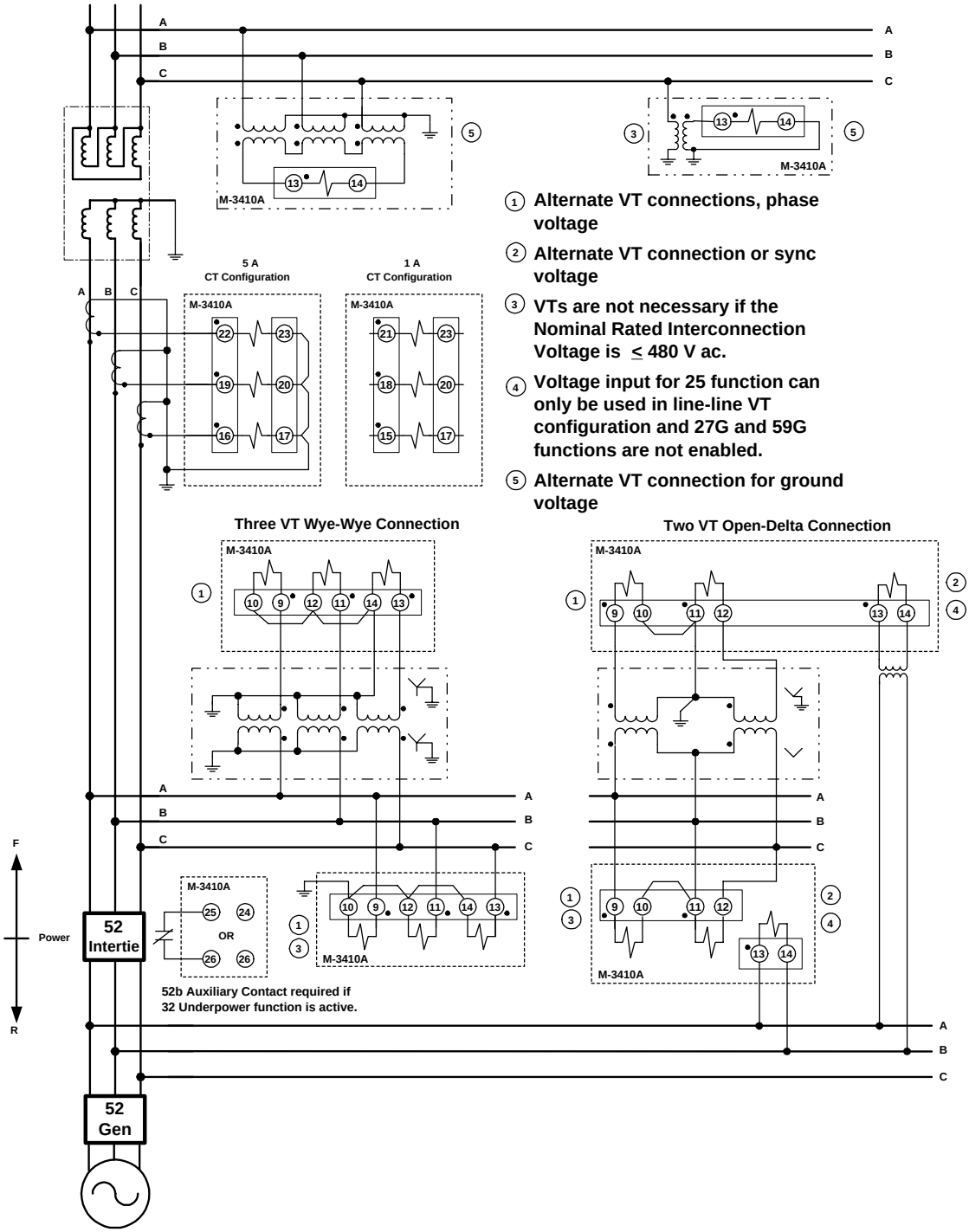

Figure 6 Typical Three-Line Diagram–Intertie Protection

■ **NOTES**:

1. The 27G and 59G protective functions are only available when the relay is configured to use line-to-line VTs and the 25 function is not enabled.
2. The 25 protective function is only available when the relay is configured to use line-to-line VTs and the 27G and 59G functions are not enabled.
3. The 32 protective function in single phase detection mode is only available when the relay is configured to use line-to-ground VTs.

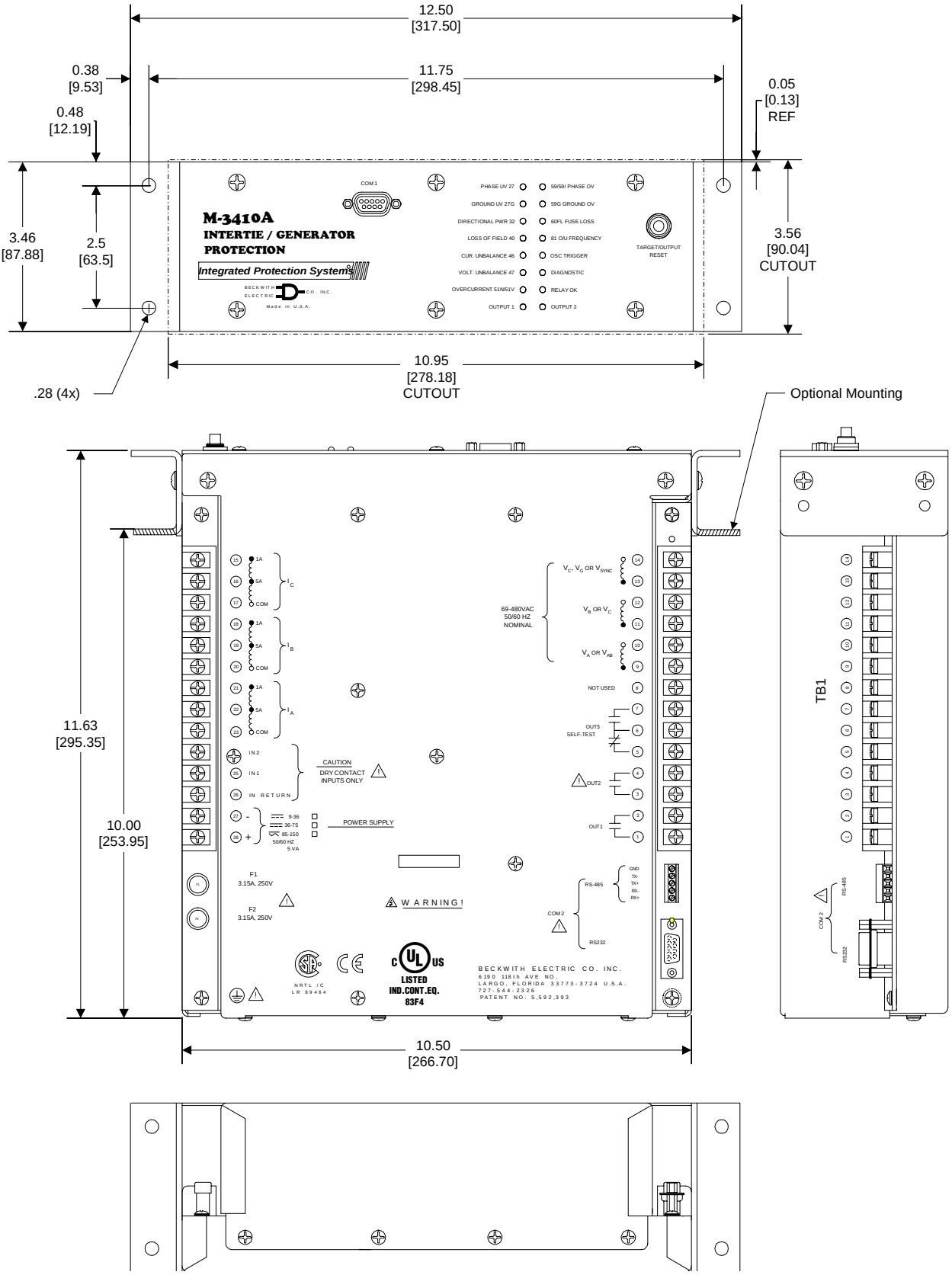

Figure 7 Optional Horizontal/Vertical Panel Mounting Dimensions

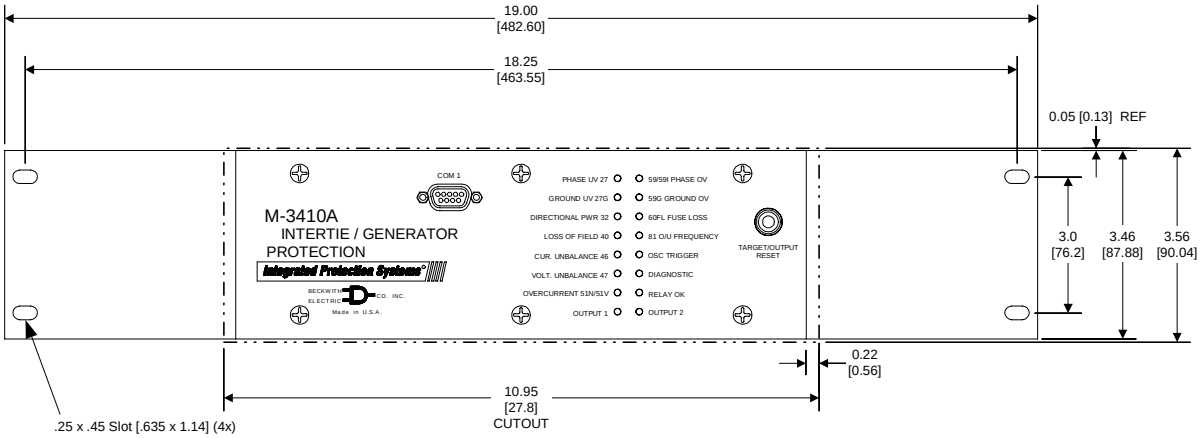

Figure 8 Standard 19" Rack Mount Dimensions

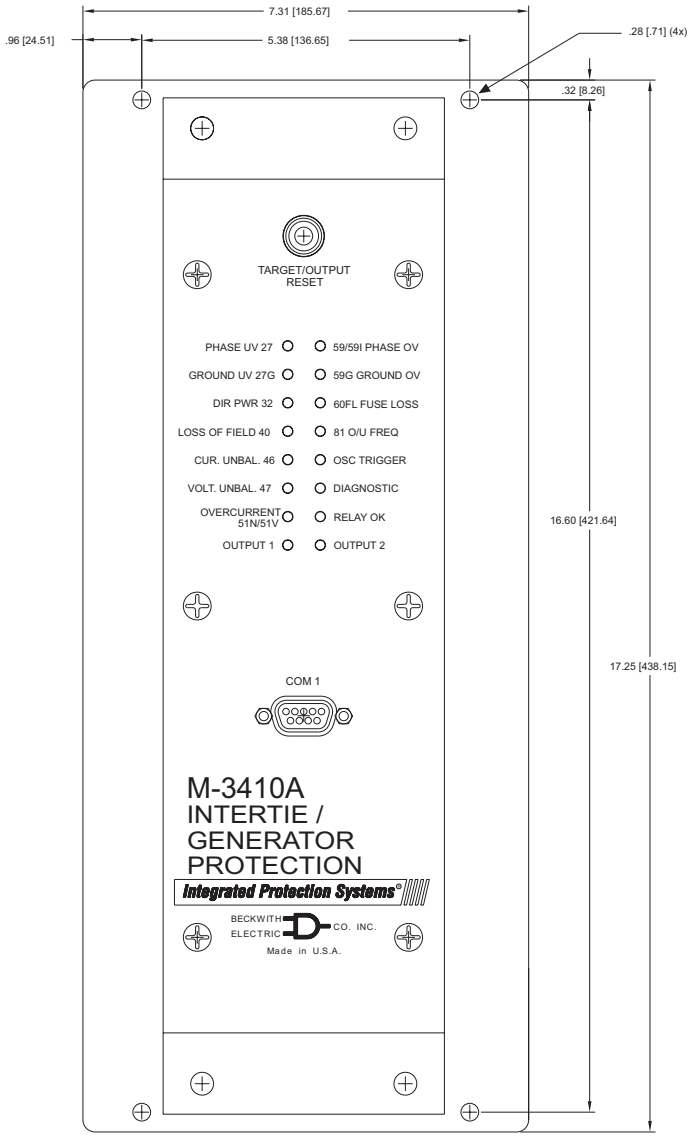

Figure 9 M-0290 and M-0296 Replacement Adapter Plate Dimensions

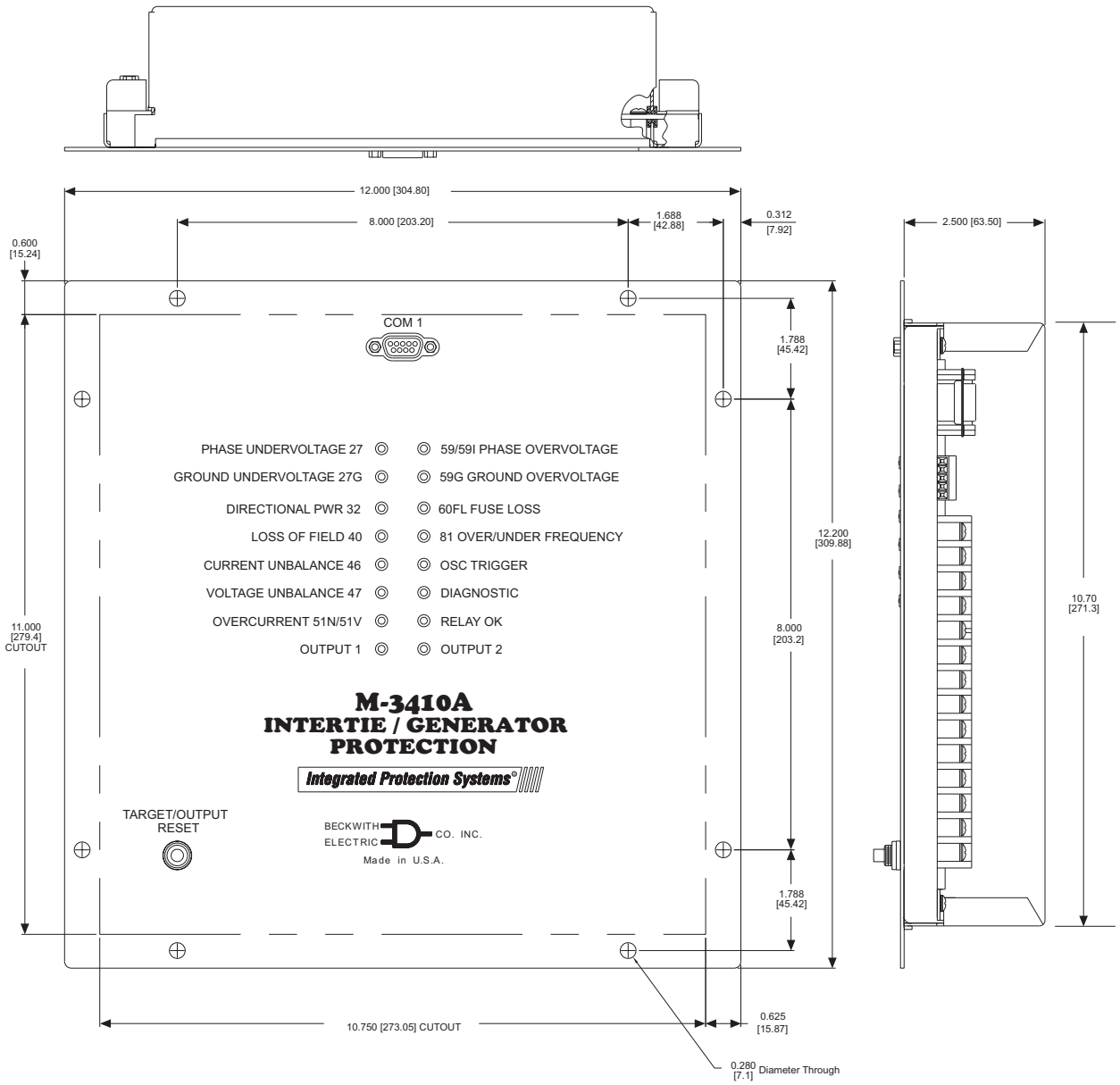

Figure 10 Standard Panel Mounting Dimensions

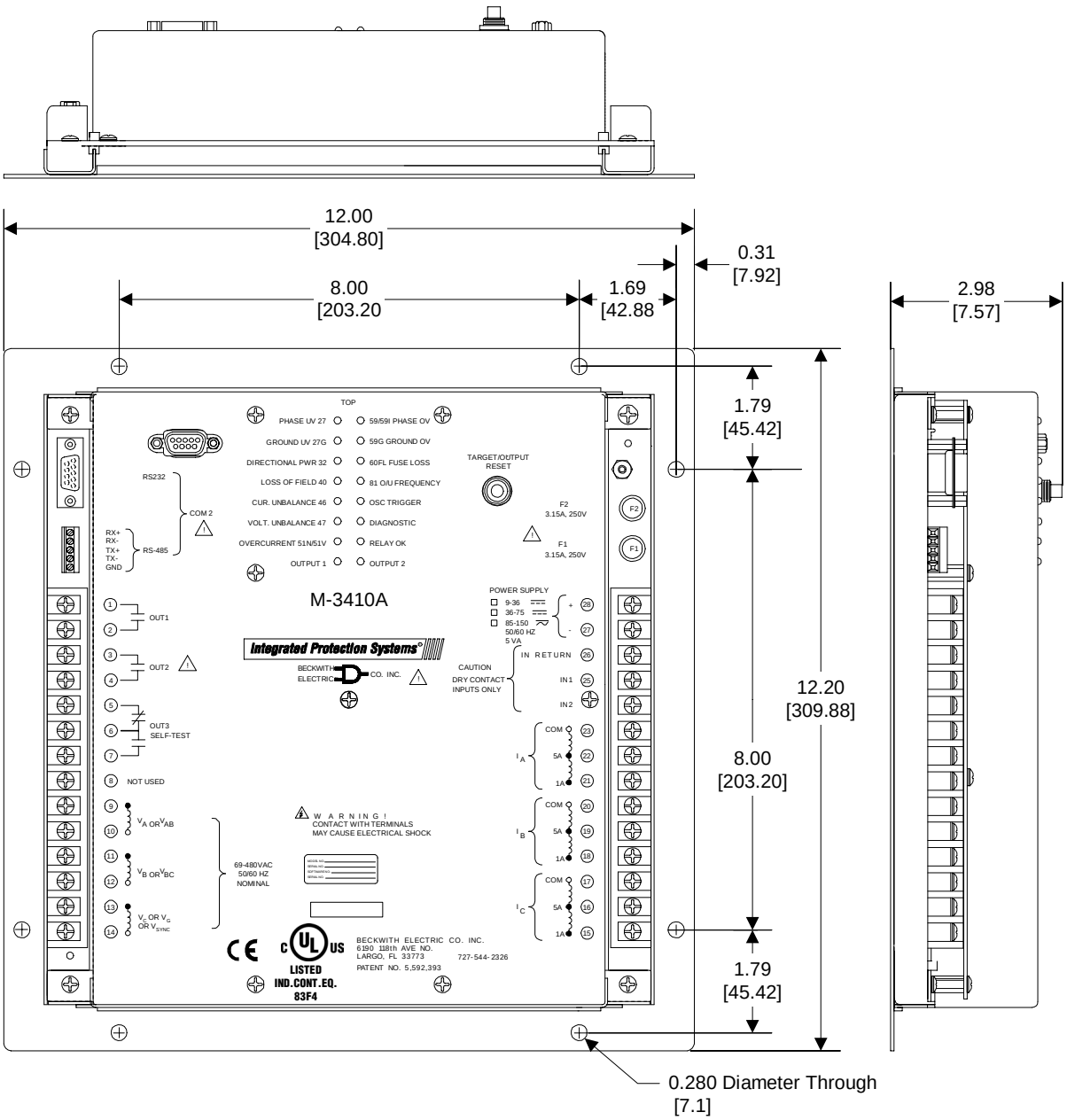

Figure 11 Surface Mount Version External Connections and Mounting Dimensions

This Page Left Intentionally Blank

BECKWITH ELECTRIC CO., INC.
6190 - 118th Avenue North • Largo, Florida 33773-3724 U.S.A.
PHONE (727) 544-2326 • FAX (727) 546-0121
marketing@beckwithelectric.com
www.beckwithelectric.com
ISO 9001:2008

© 2001 Beckwith Electric Co. All Rights Reserved.
Printed in USA

800-3410A-SP-04MC1 01/13

WARNING

DANGEROUS VOLTAGES, capable of causing death or serious injury, are present on the external terminals and inside the equipment. Use extreme caution and follow all safety rules when handling, testing or adjusting the equipment. However, these internal voltage levels are no greater than the voltages applied to the external terminals.

DANGER! HIGH VOLTAGE

– This sign warns that the area is connected to a dangerous high voltage, and you must never touch it.

PERSONNEL SAFETY PRECAUTIONS

The following general rules and other specific warnings throughout the manual must be followed during application, test or repair of this equipment. Failure to do so will violate standards for safety in the design, manufacture, and intended use of the product. Qualified personnel should be the only ones who operate and maintain this equipment. Beckwith Electric Co., Inc. assumes no liability for the customer's failure to comply with these requirements.

– This sign means that you should refer to the corresponding section of the operation manual for important information before proceeding.

Always Ground the Equipment

To avoid possible shock hazard, the chassis must be connected to an electrical ground. When servicing equipment in a test area, the Protective Earth Terminal must be attached to a separate ground securely by use of a tool, since it is not grounded by external connectors.

Do NOT operate in an explosive environment

Do not operate this equipment in the presence of flammable or explosive gases or fumes. To do so would risk a possible fire or explosion.

Keep away from live circuits

Operating personnel must not remove the cover or expose the printed circuit board while power is applied. In no case may components be replaced with power applied. In some instances, dangerous voltages may exist even when power is disconnected. To avoid electrical shock, always disconnect power and discharge circuits before working on the unit.

Exercise care during installation, operation, & maintenance procedures

The equipment described in this manual contains voltages high enough to cause serious injury or death. Only qualified personnel should install, operate, test, and maintain this equipment. Be sure that all personnel safety procedures are carefully followed. Exercise due care when operating or servicing alone.

Do not modify equipment

Do not perform any unauthorized modifications on this instrument. Return of the unit to a Beckwith Electric repair facility is preferred. If authorized modifications are to be attempted, be sure to follow replacement procedures carefully to assure that safety features are maintained.

PRODUCT CAUTIONS

Before attempting any test, calibration, or maintenance procedure, personnel must be completely familiar with the particular circuitry of this unit, and have an adequate understanding of field effect devices. If a component is found to be defective, always follow replacement procedures carefully to that assure safety features are maintained. Always replace components with those of equal or better quality as shown in the Parts List of the Instruction Book.

Avoid static charge

This unit contains MOS circuitry, which can be damaged by improper test or rework procedures. Care should be taken to avoid static charge on work surfaces and service personnel.

Use caution when measuring resistances

Any attempt to measure resistances between points on the printed circuit board, unless otherwise noted in the Instruction Book, is likely to cause damage to the unit.

TABLE OF CONTENTS

M-3410A Intertie/Generator Protection Instruction Book

Chapter 1 Introduction

1.1 Instruction Book Contents 1-1
Chapter 1: Introduction 1-1
Chapter 2: Installation 1-1
Chapter 3: Configuration and Settings 1-1
Chapter 4: Operation and Interface 1-1
Chapter 5: Testing 1-1
Appendix A: Configuration Record Forms 1-1
Appendix B: Communications 1-1
Appendix C: Self-Test Error Codes 1-1
Appendix D: Curves 1-2
Appendix E: Declaration of Conformity 1-2
Appendix F: Layup and Storage 1-2

1.2 M-3410A Intertie/Generator Protection Relay 1-2
Generator Protection 1-2
Intertie Protection 1-2
Single Phase Application Considerations 1-3
Table 1-1 M-3410A Intertie Protection Functions 1-3
Table 1-2 M-3410A Generator Protection Functions 1-3
Single-phase Three-wire 1-4
Single-phase Two-wire 1-4
Alternate Single-phase Two-wire 1-4
M-3810A IPScom® Communications Software 1-4

1.3 Accessories 1-4
M-3933/M-0423 Serial Communication Cables 1-4
M-3801D IPSplot® PLUS Oscillograph Analysis Software Package 1-4

Chapter 2 Installation

2.1 General Information 2-1
Service Conditions and Conformity to CE Standard 2-1

Chapter 2 Installation (Cont'd)

2.2 Mechanical/Physical Dimensions 2-1
Figure 2-1 M-3410A Standard Mounting Dimensions 2-2
Figure 2-2 Optional Horizontal/Vertical Panel Mounting Dimensions 2-3
Figure 2-3 Standard 19" Rack Mount Dimensions 2-4
Figure 2-4 M-0290 and M-0296 Replacement Adapter Plate Dimensions 2-4
Figure 2-5 Surface Mount Version Mounting Dimensions 2-5

2.3 External Connections 2-6
Grounding Requirements 2-6
Figure 2-6 Output Relay Actuation Setting 2-6
Unit Isolation 2-6
Insulation Coordination 2-6
Torque Requirements 2-6
Relay Outputs 2-6
Replacement Fuses 2-6
Figure 2-7 External Connections 2-7
Figure 2-8 Optional Horizontal and Vertical Panel External Connection Layout 2-8
Figure 2-9 One-Line Connection Diagram - Generator Protection 2-9
Figure 2-10 One-Line Connection Diagram - Intertie Protection 2-10
Figure 2-11 Three-Line Connection Diagram - Generator Protection 2-11
Figure 2-12 Three-Line Connection Diagram - Intertie Protection 2-12
Figure 2-13 Single-Phase Three-Wire Connection Diagram 2-13
Figure 2-14 Single-Phase Two-Wire Connection Diagram 2-14
Figure 2-15 Alternate Single-Phase Three-Wire Connection Diagram 2-15

2.4 IPScom® Communications Software 2-16
Overview 2-16
Communication Protocol 2-16
System Requirements 2-16
Hardware Requirements 2-16

2.5 M-3810A IPScom Installation and Setup 2-16
Figure 2-16 IPScom Program Icon 2-16

2.6 IPScom Communications Setup 2-17
Direct Connection 2-17
Relay Setup for Local Communication 2-17
Figure 2-17 M-3810A IPScom® Communication Dialog Box 2-18

2.7 Commissioning Checkout 2-19
Figure 2-18 M-3810A IPScom Secondary Status Screen 2-20

Chapter 2 Installation (Cont'd)

2.8 Relay Remote Communication Setup (PC) 2-21
Overview 2-21
Communication Protocol 2-21
Figure 2-19 Multiple System Addressing Using Communications-Line Splitter 2-21
Multiple System Application 2-21
Serial Multidrop Network Application 2-21
Installing the Modems 2-22
Activating Communications 2-23
COM2 Configuration 2-23

2.9 Circuit Board Switches and Jumpers 2-23
Table 2-1 Jumpers 2-23
Accessing Jumpers 2-23
Factory Default Reset 2-24
Figure 2-20 M-3410A IO Board 2-25
Figure 2-21 M-3410A Top-View CPU Board 2-25
Figure 2-22 M-3410A Bottom-View CPU Board 2-26

Chapter 3 Configuration and Settings

3.1 Relay Configuration 3-1
Functions 3-1
Relay Setup 3-2
Figure 3-1 M-3810A IPScom Setup Relay Dialog Box 3-2
Nominal Frequency 3-3
CT Secondary Rating 3-3
Nominal Voltage 3-3
Nominal Current 3-3
Input Active State 3-3
Output Contact Mode 3-3
VT Configuration 3-3
59/27 Magnitude Select 3-3
Phase Rotation 3-3
Ratio of the Phase VTs/CTs 3-4
Relay Seal-in Time 3-4
OK LED Flash 3-4
User Logo 3-4
Oscillograph Setup 3-4
Figure 3-2 M-3810A IPScom® Setup Oscillograph Recorder Dialog Box 3-4
Event Recorder Setup 3-5
Figure 3-3 M-3810A IPScom Setup Event Recorder Trigger Dialog Box 3-5

Chapter 3 Configuration and Settings (Cont'd)

3.2 Setpoints and Time Settings 3-6
25 Sync Check 3-6
Phase Angle Check 3-6
Delta Voltage and Delta Frequency Check 3-6
Dead Line/Dead Bus Check 3-6
Dead Line/Dead Bus Check Input Initiate 3-6
Supervision of 25 by 79 3-6
Figure 3-4 25 Function Logic Diagrams 3-7
Figure 3-5 Function 25/79 Logic Diagrams 3-8
Figure 3-6 M-3810A IPScom® 25 Sync Check Setup Dialog Screen 3-9
27 Phase Undervoltage, 3-Phase 3-10
Figure 3-7 M-3810A IPScom (27) Phase Undervoltage Setup Dialog Screen 3-10
27G/59G Undervoltage/Overvoltage, Ground Circuit or Zero Sequence 3-11
Ground Fault Detection using a Broken-Delta VT and the 59G Function 3-11
Ground Fault Detection Using One Phase-to-Ground VT and 59G/27G 3-11
Figure 3-8 Ground Fault Detection Using a Broken-Delta VT and 59G 3-12
Figure 3-9 Ground Fault Detection Using One Phase-to-Ground VT and 59G/27G ... 3-12
Table 3-1 Typical Shunt Resistor Values 3-12
Figure 3-10 M-3810A IPScom (27G) Ground Undervoltage Setup Dialog Screen 3-13
Figure 3-11 M-3810A IPScom (59G) Ground Overvoltage Setup Dialog Screen 3-13
32 Directional Power, 3-Phase or 1-Phase 3-14
Configuration Process 3-14
Figure 3-12 Directional Power Configurations 3-15
40 Loss of Field (Generator Protection Only) 3-17
Figure 3-14 Loss-of-Field (40)—Protective Approach 1 3-18
Figure 3-15 Loss-of-Field (40)—Protective Approach 2 3-18
46 Negative Sequence Overcurrent (Current Unbalance) 3-20
Figure 3-17 M-3810A IPScom (46) Negative Sequence Overcurrent Setup Dialog Screen 3-21
47 Negative Sequence Overvoltage (Voltage Unbalance) 3-22
Figure 3-18 M-3810A IPScom (47) Negative Sequence Overvoltage Setup Dialog Screen 3-22
51N Inverse Time Residual Overcurrent 3-23
Figure 3-19 M-3810A IPScom (51N) Inverse Time Residual Overcurrent Setup Dialog Screen 3-23
51V Inverse Time Overcurrent, with Voltage Control or Voltage Restraint 3-24
Figure 3-20 Voltage Restraint (51V) Characteristic 3-24
Table 3-2 Delta/Wye Transformer Voltage-Current Pairs 3-25
Figure 3-21 M-3810A IPScom (51V) Inverse Time Overcurrent with Voltage Control or Voltage Restraint Setup Dialog Screen 3-25
59 Phase Overvoltage, 3-Phase 3-26
Figure 3-22 M-3810A IPScom (59) Phase Overvoltage Setup Dialog Screen 3-26

Chapter 3 Configuration and Settings (Cont'd)

59I Peak Overvoltage (Intertie Protection Only) 3-27
Figure 3-23 M-3810A IPScom® (59I) Peak Overvoltage Setup Voltage Dialog Screen 3-27
60FL VT Fuse Loss 3-28
Figure 3-24 M-3810A IPScom (60FL) Fuse Loss Setup Dialog Screen 3-28
79 Reconnect Enable Time Delay 3-29
Figure 3-25 79 Reconnect Logic 3-29
Figure 3-26 M-3810A IPScom (79) Reconnect Enable Time Delay Setup Dialog Screen 3-30
81 Over/Under Frequency 3-31
Figure 3-28 M-3810A IPScom (81) Over/Under Frequency Setup Dialog Screen 3-33

Chapter 4 Operation and Interface

4.1 General Information 4-1
Communication Protocol 4-1
Direct Connection 4-1

4.2 Activating Communications 4-2
M-3810A IPScom 4-2

4.3 M-3810A IPScom Functional Description 4-3
Overview 3
Figure 4-1 M-3810A IPScom Menu Selections 4-3
File Menu 4
Figure 4-2 M-3810A IPScom New Device Profile Dialog Box 4-4
Comm Menu 4-4
Figure 4-3 M-3810A IPScom Communication Dialog Box 4-5
Relay Menu 4-6
Figure 4-4 M-3810A IPScom Setup Relay Dialog Box 4-6
Figure 4-5 M-3810A IPScom Relay Setpoints Dialog Box 4-7
Figure 4-6 M-3810A IPScom Negative Sequence Overcurrent Setpoint Dialog Box .. 4-7
Figure 4-7 M-3810A IPScom All Setpoints Table Dialog Box 4-8
Figure 4-8 M-3810A IPScom Configure Dialog Box 4-9
Figure 4-10 M-3810A IPScom Event Trigger Setup 4-10
Figure 4-11 M-3810A IPScom Event List Dialog Box 4-11
Figure 4-12 M-3810A IPScom Setup Oscillograph Recorder Dialog Box 4-11
Tools Menu 4-12
Access Code Submenu 4-12
Table 4-1 M-3810A IPScom User Access Code Level Privileges 4-12
Figure 4-13 M-3810A IPScom Comm Access Code Reset 4-13
Figure 4-14 M-3810A IPScom User Access Code Reset 4-13
Diagnostics Command 4-13

Chapter 4 Operation and Interface (Cont'd)

Input/Output Test 4-13
Figure 4-15 M-3810A IPScom® Input/Output Test Panel 4-13
COM Test 4-13
Figure 4-16 M-3810A IPScom COM Test Panel 4-13
Figure 4-17 M-3810A IPScom Current Status Panel 4-14
Calibration Command 4-14
Figure 4-18 M-3810A IPScom Calibration 4-14
Relay Software Update Command 4-14
Figure 4-19 M-3810A IPScom Relay Software Update 4-14
Relay Comm Setup 4-14
Figure 4-20 M-3810A IPScom Relay COM Setup Window 4-14
Relay Defaults Setup 4-15
Figure 4-21 M-3810A IPScom Relay Defaults Setup 4-15
Option Command 4-15
Figure 4-22 M-3810A IPScom Option Dialog Box 4-15
Window Menu/Help Menu 4-15
Figure 4-23 M-3810A IPScom About IPScom Dialog Box 4-15
Figure 4-24 M-3810A IPScom Primary Status Dialog Box 4-16
Figure 4-25 M-3810A IPScom Secondary Status Dialog Box 4-16
Figure 4-26 M-3810A IPScom Loss of Field Dialog Box 4-17
Figure 4-27 M-3810A IPScom Sync Scope 4-18
Figure 4-28 M-3810A IPScom Function Status Dialog Box 4-19

4.4 Cautions 4-20
System and IPScom Compatibility 4-20
Time and Date Stamping 4-20
Echo Cancel 4-20
Serial Port Connections 4-20

4.5 M-3410A Battery Replacement 4-20

Chapter 5 Testing

5.1 Equipment/Test Setup 5-2
Equipment Required 5-2
Table 5-1 Functions to Disable When Testing 5-2
Setup 5-2
Figure 5-1 Voltage Inputs: Configuration V1 5-3
Figure 5-2 Current Inputs: Configuration C1 5-3

Chapter 5 Testing (Cont'd)

5.2 Diagnostic Test Procedures 5-4
Output Test (Relay) 5-4
Table 5-2 Output Contacts 5-4
Control/Status Input Test 5-4
Table 5-3 Control/Status Inputs 5-4
Output Test (Self-Test Relay) 5-4
Table 5-4 Self-Test Ouput Contacts 5-4
Target LED Test 5-5
COM Test 5-5
Com1 Loopback Test 5-5
Figure 5-3 RS-232 Loopback Plug 5-5
Com2 RS-232 Loopback Test 5-5
Com2 RS-485 Loopback Test 5-5
Figure 5-4 RS-485 4-Wire Loopback Configuration 5-5

5.3 Auto Calibration 5-6
Figure 5-5 Current Input Configuration 5-7
Figure 5-6 Voltage Input Configuration 5-7

5.4 Functional Test Procedures 5-8
25 Sync Check 5-9
27 Phase Undervoltage, 3-Phase (#1 or #2) 5-11
27G Ground Undervoltage 5-12
32 Directional Power, 3-Phase (#1 or #2) L-L/L-G/L-L 5-13
32 Directional Power (#1 or #2) Line-Ground 5-14
40 Loss-of-Field (#1 or #2) 5-15
46 Negative Sequence Overcurrent Definite Time (Current Unbalance) 5-17
46 Negative Sequence Overcurrent Inverse Time (Current Unbalance) –Generator Protection (Curve I22t = K, or Curve D-9) 5-18
46 Negative Sequence Overcurrent Inverse Time (Current Unbalance) –Intertie Protection 5-19
t = time in seconds, TD = Time Dial setting, M = current in multiples of pickup 5-19
47 Negative Sequence Overvoltage (Voltage Unbalance) (#1 or #2) 5-20
51N Inverse Time Residual Overcurrent 5-21
51V Inverse Time Overcurrent with Voltage Control or Voltage Restraint 5-22
59 Phase Overvoltage, 3-Phase (#1 or #2) 5-23
59G Ground Overvoltage 5-24
59I Peak Overvoltage, 3-Phase 5-25
60FL Fuse Loss 5-26
79 Reconnect Time Delay 5-27
81 Over/Under Frequency (#1, #2, #3, #4) 5-28

Appendix A

Configuration Record Forms A-1
Table A-1 Relay Configuration Table A-2
PC COM1 Setup A-3
PC COM2 Setup A-3
PC COM3 Setup A-3
Communication Address A-3
Table A-2 Communication Data & Unit Setup Record Form A-3
Relay Setup A-4
Table A-3 System Setup Record Form A-4
(25) Sync-Check A-5
(27) Undervoltage A-5
Ta*ble A-4 Relay Setpoints and Settings Record Form (page 1 of 8)* A-5
(27G) Ground Undervoltage A-6
(32) Reverse/Forward Power A-6
Ta*ble A-4 Relay Setpoints and Settings Record Form (page 2 of 8)* A-6
(40) Loss of Field (dual-zone offset-mho characteristic) A-7
Table A-4 Relay Setpoints and Settings Record Form (page 3 of 8) A-7
(46) Negative Sequence Overcurrent A-8
(47) Negative Sequence Overvoltage A-8
Table A-4 Relay Setpoints and Settings Record Form (page 4 of 8) A-8
(51N) Inverse Time Residual Overcurrent A-9
(51V) Inverse Time Overcurrent, with Voltage Control or Restraint A-9
Table A-4 Relay Setpoints and Settings Record Form (page 5 of 8) A-9
(59) Overvoltage A-10
(59G) Ground Overvoltage A-10
Table A-4 Relay Setpoints and Settings Record Form (page 6 of 8) A-10
(59I) Peak Overvoltage A-11
(60 FL) Fuse-Loss Detection A-11
(79) Reconnect Enable Time Delay A-11
Table A-4 Relay Setpoints and Settings Record Form (page 7 of 8) A-11
(81) Over/Under Frequency A-12
Table A-4 Relay Setpoints and Settings Record Form (page 8 of 8) A-12

Appendix B - Communications

Communication Ports B-1
Table B-1 Communication Port Signals B-2
Figure B-1 Null Modem Cable: M-0423 ..... B-2
Figure B-2 RS-232 Fiber Optic Network B-3
Figure B-3 RS-485 2-Wire Network B-4
Figure B-4 RS-485 4-Wire Network B-4

Appendix C – Self-Test Error Codes

Table C-1 Self-Test Error Codes C-1
Table C-1 Self-Test Error Codes (continued) C-2

Appendix D – Inverse Time Curves

Table D-1A M-3410A Inverse Time Overcurrent Relay Characteristic Curves (1 of 2) D-2
Table D-1B M-3410A Inverse Time Overcurrent Relay Characteristic Curves (2 of 2) D-3
Figure D-1 Definite Time Overcurrent Curve D-4
Figure D-2 Inverse Time Overcurrent Curve D-5
Figure D-3 Very Inverse Time Overcurrent Curve D-6
Figure D-4 Extremely Inverse Time Overcurrent Curve D-7
Figure D-5 IEC Curve #1 Inverse D-8
Figure D-6 IEC Curve #2 Very Inverse D-9
Figure D-7 IEC Curve #3 Extremely Inverse D-10
Figure D-8 IEC Curve #4 Long-Time Inverse D-11
Figure D-9 (46) Negative Sequence Overcurrent Inverse Time Curves for Generator Protection D-12

Appendix E – Declaration of Conformity

Appendix F – Layup and Storage

© 2001 Beckwith Electric Co. All Rights Reserved.
Printed in USA

This Page Left Intentionally Blank

1 Introduction

1.1 Instruction Book Contents 1–1

1.2 M-3410A Intertie/Generator Protection Relay 1–2

1.3 Accessories 1–4

1.1 Instruction Book Contents

This instruction book consists of five chapters and four Appendices.

Chapter 1: Introduction

Chapter One summarizes relay capabilities, introduces the instruction book contents, and describes accessories.

Chapter 2: Installation

Chapter Two is designed for the person or group responsible for the installation of the M-3410A Intertie/Generator Protection Relay. It includes the following elements necessary to affect the proper installation and commissioning of the relay:

- Functional and connection diagrams for a typical installation of the relay
- Provides instructions for the installation of M-3810A IPScom® for Windows™ and M-3811A IPScom for Palm OS® Communication Software and establishes both local and remote communications with the relay
- Provides instructions for relay Commissioning Checkout.
- Configures the rear port COM2 for RS-485 or RS-232 communications.

Chapter 3: Configuration and Settings

Chapter Three is designed for the person or group responsible for the configuration and setting of the M-3410A Intertie/Generator Protection Relay. It describes the configuration process for the unit (choosing active functions), output contact assignment and input blocking designation. It also illustrates the definition of system quantities, equipment characteristics required by the protective relay and describes the individual function setpoints and time settings.

Chapter 4: Operation and Interface

This chapter is designed for the person or group responsible for relay operation and interface maintenance. Relay operation and interface access is described as a function of the M-3810A IPScom for Windows and M-3811A IPScom for Palm OS Communications Software package.

Chapter 5: Testing

This chapter provides step-by-step test procedures for each function.

Appendix A: Configuration Record Forms

This Appendix supplies a set of forms to record and document the settings required for the proper operation of the relay.

Appendix B: Communications

This Appendix describes communication port signals, protocols, various topologies and equipment required for remote communication.

Appendix C: Self-Test Error Codes

This Appendix lists all the error codes and their definitions.

Appendix D: Curves

This Appendix contains a graph of the nine families of Inverse Time Curves, IEC curves, and the Inverse Time Negative Sequence curves.

Appendix E: Declaration of Conformity

This Appendix lists those European standards which the M-3410A Intertie/Generator Protection Relay meets or exceeds.

Appendix F: Layup and Storage

Appendix F includes the recommended storage parameters, periodic surveillance activities and layup configuration for the M-3410A Intertie/Generator Protection Relay.

1.2 M-3410A Intertie/Generator Protection Relay

The M-3410A Intertie/Generator Protection Relay is a microprocessor-based unit that uses digital signal processing technology to provide up to twelve protective relaying functions for intertie protection or up to eleven protective relaying functions for generator protection.

Available hardware configurations for output contacts include two normally open (Option B1), one normally open and one normally closed (Option B2), or two normally closed (Option B3) contacts.

Any of the protective functions can be individually programmed to activate the two programmable output contacts. The user can configure the two programmable output contacts to either energize or de-energize to issue an output command.

Generator Protection

The relay can protect a generator from abnormal voltage, abnormal frequency, motoring (loss of prime mover), phase faults, ground faults, and unbalanced currents. In addition, sync check may be applied for proper connection of the generator to the bus.

Intertie Protection

The relay can protect the utility from having generators island on the distribution system after the utility disconnects power from the feeder. This is accomplished by monitoring the intertie (point of common coupling to the utility) for abnormal voltage, abnormal frequency, ferroresonance and excessive power import/export, which can indicate loss of utility supply. The relay also provides detection of phase and ground faults, as well as current and voltage unbalance on the utility system. In addition, sync check may be applied to supervise closure of the intertie breaker according to the interconnected Utility's practice.

The available internal functions of the relay are listed in Tables 1-1 and 1-2. The nomenclature follows the standards of ANSI/IEEE Std. C37.2-1991, Standard Electric Power Systems Device Function Numbers.

Two control/status inputs can be programmed to block any relay function and/or to trigger the oscillograph recorder. Any of the functions can be individually programmed to activate either of two programmable outputs, each with a contact.

A total of 32 nonvolatile events can be stored. The recorded information includes the function(s) operated, the function(s) picked up, input/output contact status, time stamp and timer status. The events can be retrieved through the communications port. After the 32nd event is stored, additional events result in the oldest event being dropped (FIFO). Storage of events is nonvolatile and will be retained without power as long as the on-board battery is healthy.

The oscillograph recorder provides comprehensive data recording of all monitored waveforms, input and output status, storing up to 120 cycles of data. The total record length can be configured for one (120 cycles) or two (80 cycles each) partitions. A programmable post trigger delay (5 to 95%) is incorporated to capture breaker operation.

The oscillograph is triggered either using the serial interface, or designated status input signals or M-3410A programmable output operations. Storage of oscillograph records is nonvolatile and will be retained even without power as long as the on board battery is healthy.

This data can be downloaded and analyzed using the M-3801D IPSplot® *PLUS* Oscillograph Analysis Software package or by third party viewing software employing the Common Format for Transient Data Exchange (COMTRADE).

Two communication ports are provided. The front-panel port, COM1 is a standard 9-pin RS-232 DTE-configured communications port used to locally set and interrogate the relay using a portable computer or a Palm OS® handheld device. The

second communications port, COM2, is provided at the rear of the unit and can be configured DTE RS-232 or RS-485, available at the rear terminal block of the relay. Either port, COM1 or COM2, can be used to remotely set and interrogate the relay using a hard-wired serial connection or modem.

Single Phase Application Considerations

There are two types of single-phase systems, two-wire or three-wire, that may be encountered in the use of the M-3410A relay. In either case, the core functions normally required by utilities and state interconnection documents operate normally. The manner in which the voltages and currents are connected to the relay is different, depending on the type of application. Since the relay and associated communications software are designed for three-phase operation, some of the protective relay functions, meter readings, and monitored quantities will be abnormal. For example, the correctly connected balanced voltage quantities for a three-phase application will show only positive sequence quantities while the single-phase application will show positive, negative, and zero sequence quantities even though the voltages are connected properly.

The Undervoltage (27), Overvoltage (59) and Over/Under Frequency (81 O/U) functions operate exactly as they would in a three-phase application. The setpoints for these functions are determined and entered into the relay in the normal fashion. The Directional Power (32) Function operation is affected by the lack of three phase voltages and currents. The nominal voltage in the relay setup screen is defined as the voltage on the relay terminals when the generator is at its rated voltage. The nominal current is defined as the current in the relay when the generator is at its nameplate rating. These calculations must include the ratio of the current transformers (CTR) being used. Since the Directional Power (32) Function and metering are a function of the nominal voltage and current magnitudes in the relay, it is also dependent on the needs of customer. For example, if the Directional Power (32) Function and metering requirements are based on the size of the power transformer, the nominal current would be calculated on the basis of the transformer rating rather than the generator rating. The VT configuration on the Setup Screen must always be selected to Line-to-Ground regardless of the application. On the Directional Power (32) Function setpoint screen, the Three Phase Detection must be set to disabled.

Function	Description
25	Sync-Check
27	Phase Undervoltage
27G	Ground Undervoltage
32	Directional Power
46	Negative Sequence Overcurrent
47	Negative Sequence Overvoltage
51N	Inverse Time Residual Overcurrent
51V	Inverse Time Overcurrent with Voltage Control or Voltage Restraint
59	Phase Overvoltage
59G	Ground Overvoltage
59I	Peak Overvoltage
60FL	VT Fuse-Loss Detection
79	Reconnect Enable Time Delay
81	Over/Under Frequency

Table 1-1 M-3410A Intertie Protection Functions

Function	Description
25	Sync-Check
27	Phase Undervoltage
32	Directional Power
40	Loss-of-Field
46	Negative Sequence Overcurrent
47	Negative Sequence Overvoltage
51N	Inverse Time Residual Overcurrent
51V	Inverse Time Overcurrent with Voltage Control or Voltage Restraint
59	Phase Overvoltage
59G	Ground Overvoltage
60FL	VT Fuse-Loss Detection
81	Over/Under Frequency

Table 1-2 M-3410A Generator Protection Functions

Single-phase Three-wire

The most common single-phase application is the three-wire system. This type is found in household and small commercial installations which are the most likely to have a single-phase generator. The wiring for this installation is shown in Figure 2-12. Since the relay and the communications software are designed for three-phase applications, the Directional Power (32) Function will operate correctly, but the measured quantity will be 1/2 of the actual value. The pickup must be set to a Per Unit (PU) of two (2) times the actual kVA, taking the 1/2 factor into account in determining the PU for the Directional Power (32) Function. The power displayed on the primary status monitoring screen will be 1.5 times the actual kVA, and on the secondary status monitoring screen will display 1 PU of the three-phase base power calculated by the relay.

Single-phase Two-wire

The second type of single-phase application is the 120 or 240 volts to ground. The wiring for this installation is shown in Figure 2-13. The Directional Power (32) Function is set to pickup at PU of actual kVA. The power displayed on the Primary Status Monitoring Screen will be the actual kVA, and the Secondary Status Monitoring Screen will display 1/3 PU of the three-phase base power calculated by the relay. The Undervoltage (27) and Directional Power (32) Functions can not be utilized with this connection.

Alternate Single-phase Two-wire

An alternate single-phase two-wire connection is shown in Figure 2-14. If the Directional Power (32) Function and Undervoltage (27) Function are required by the application, this connection must be used. With this connection, the Directional Power (32) Function can be set with no adjustment required. The power displayed on the Primary Status Monitoring Screen will be 3 times the actual kVA and the Secondary Status Monitoring Screen will display 1 PU of the three-phase base power calculated by the relay.

M-3810A IPScom® for Windows™ Communications Software

IPScom for Windows is shipped standard with every M-3410A relay. This software runs on a PC-compatible computer operating under Windows™ 95/98, NT or higher. When properly connected using either direct serial connection or modem, IPScom can provide the following functions:

- Real time monitoring of measured parameters
- Interrogation and modification of setpoints
- Line status real-time monitoring
- Recorded oscillograph data downloading
- This data can be analyzed using the M-3801D IPSplot® *PLUS* Oscillograph Analysis Software package or a third-party viewing software employing the COMTRADE format

M-3811A IPScom for Palm OS Communications Software

IPScom for Palm OS Communications Software (Palm OS 3.X and above), when resident on either a Handspring™ Visor™ or Palm Handheld, provides a portable human-machine interface (HMI) to the M-3410A Relay. IPScom for Palm OS includes all major IPScom features to support local HMI functions, with the exception of calibration and partial diagnostics (See Chapter 4, **Operation**). IPScom for Palm OS is shipped standard with every M-3410A relay.

1.3 Accessories

M-3933/M-0423 Serial Communication Cables

The M-3933 cable is a 10-foot RS-232 cable for use between the relay's rear panel (COM2) port and a modem. This cable has a DB25 (25-pin) connector (modem) and a DB9 (9-pin) at the relay end.

The M-0423 cable is a 10-foot null-modem RS-232 cable for direct connection between a PC and the relay's front panel COM1 port, or the rear COM2 port. This cable has a DB9 (9-pin) connector at each end.

M-3801D IPSplot® *PLUS* Oscillograph Analysis Software Package

The IPSplot *PLUS* Oscillograph Analysis Software runs in conjunction with the IPScom® software package on any IBM PC-compatible computer, enabling the plotting, printing, and analysis of waveform data downloaded from the M-3410A Intertie/Generator Protection Relay.

2 Installation

2.1 General Information 2–1

2.2 Mechanical/Physical Dimensions 2–1

2.3 External Connections 2–6

2.4 IPScom® Communications Software 2–16

2.5 M-3810A IPScom for Windows™ Installation and Setup 2–16

2.6 M-3811A IPScom for Palm OS® Installation and Setup 2–17

2.7 IPScom Communications Setup 2–18

2.8 Commissioning Checkout 2–20

2.9 Relay Remote Communication Setup (PC) 2–22

2.10 Circuit Board Switches and Jumpers 2–24

2.1 General Information

The person or group responsible for the installation of the relay and communications software will find herein all information required for the installation of the relay and IPScom Communications Software.

Prior to installation of the equipment, it is essential to review the contents of this manual to locate data which may be of importance during installation procedures.

Service Conditions and Conformity to CE Standard

Stating conformance to CE Standard EN 61010-1, 1993, operation of this equipment within the following service conditions does not present any known personnel hazards outside of those stated herein:

- 5° to 40° Centigrade
- Maximum relative humidity 80% for temperatures up to 31° C, decreasing in a linear manner to 50% relative humidity at 40° C.

This equipment will function properly and at stated accuracies beyond the limits of this CE Standard, as per the equipment's specifications, stated in this Instruction Book.

For reference, this chapter contains typical electrical One-Line and Three-Line Connection Diagrams as well as dimensional drawings for mounting, equipment ratings and IPScom Communications Software installation instructions.

Further, a commissioning checkout procedure is included utilizing IPScom Communications Software to check the external CT and VT connections. Additional tests which may be desirable at the time of installation are described in Chapter 5, **Testing**.

2.2 Mechanical/Physical Dimensions

Figures 2-1 through 2-5, M-3410A Mounting Dimensions, contain physical dimensions of the relay that may be required for mounting the unit.

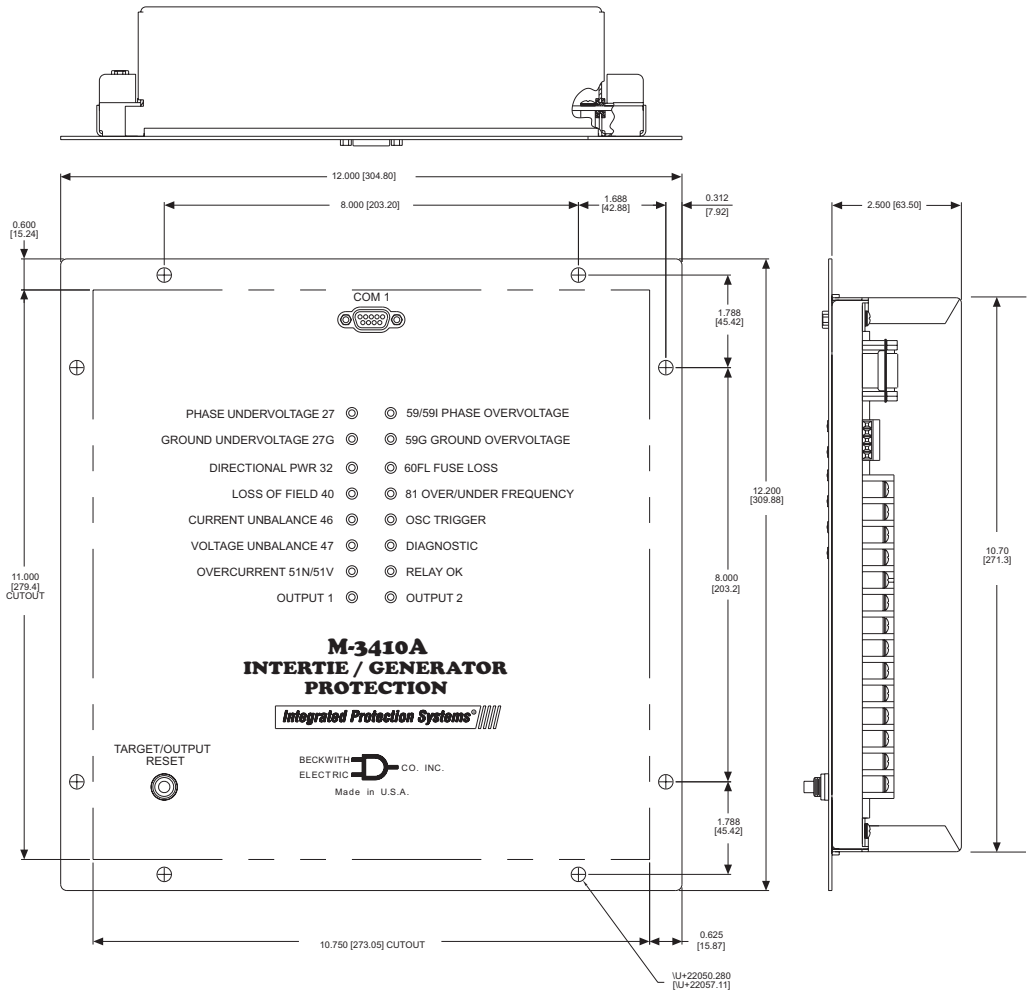

Figure 2-1 M-3410A Standard Mounting Dimensions

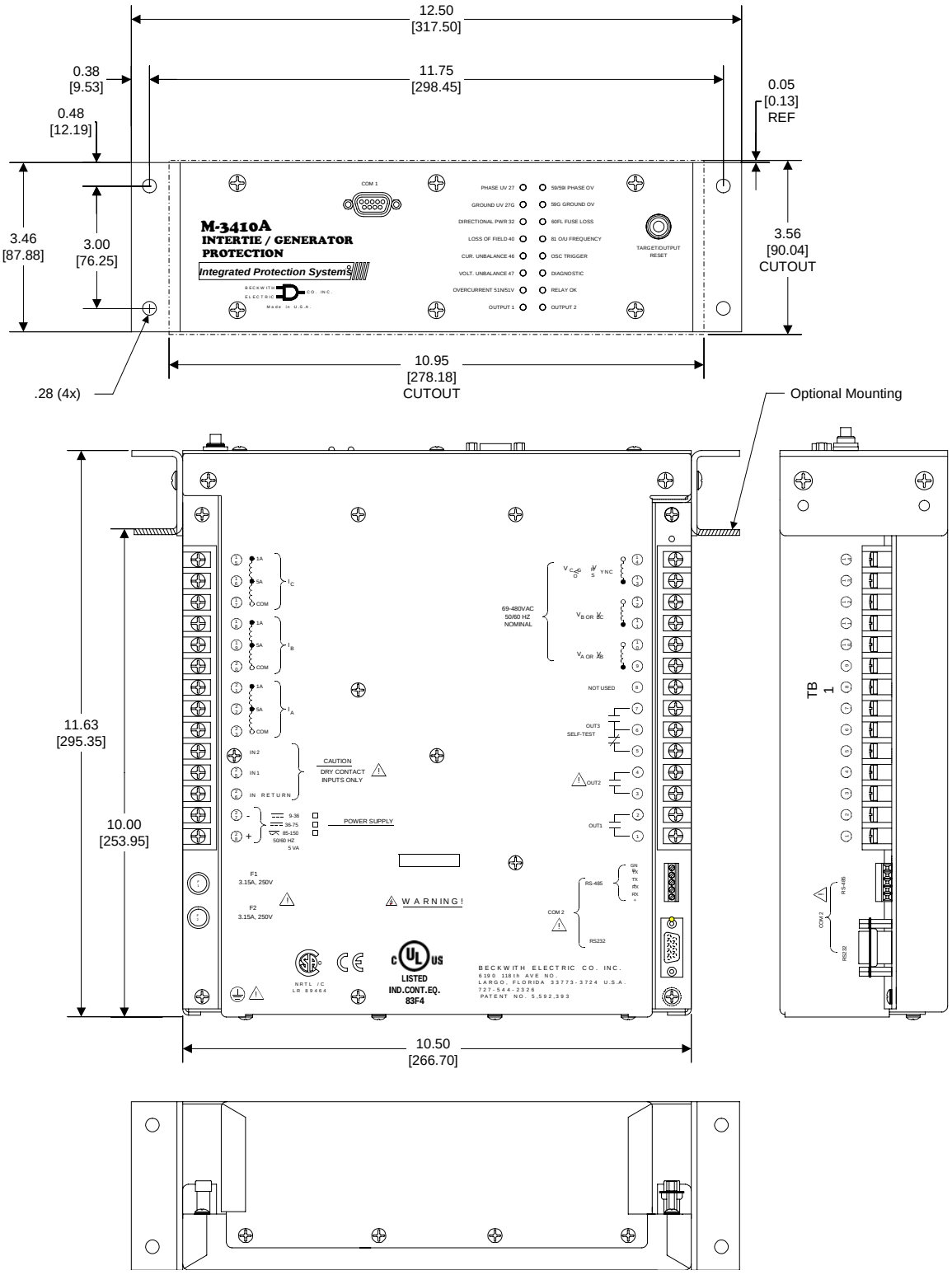

Figure 2-2 Optional Horizontal/Vertical Panel Mounting Dimensions

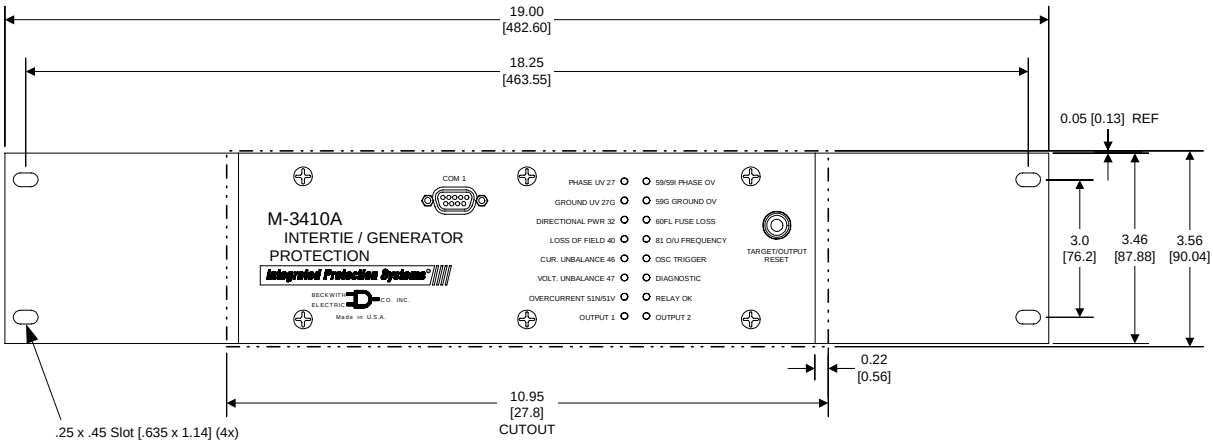

Figure 2-3 Standard 19" Rack Mount Dimensions

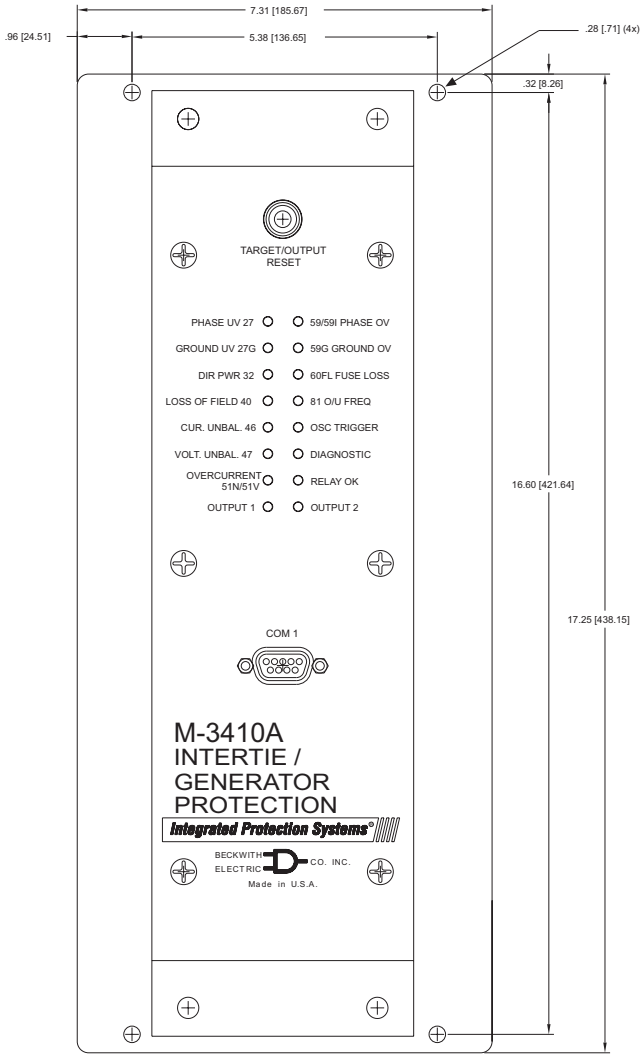

Figure 2-4 M-0290 and M-0296 Replacement Adapter Plate Dimensions

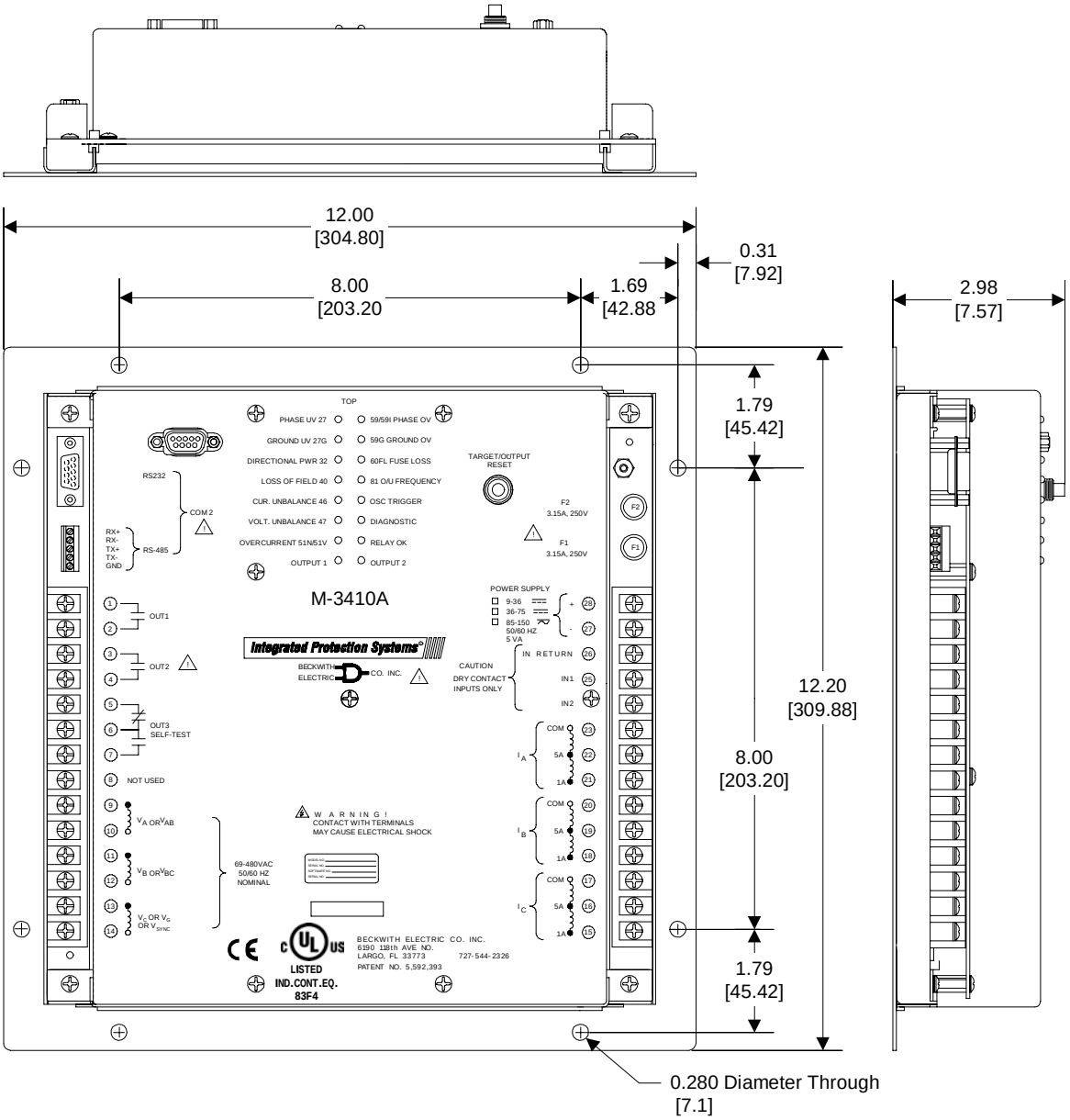

Figure 2-5 Surface Mount Version Mounting Dimensions

2.3 External Connections

WARNING: The protective grounding terminal must be connected to an earthed ground anytime external connections have been made to the unit.

WARNING: ONLY dry contacts are to be connected to inputs (terminals TB-24, TB-25, and TB-26) because these contact inputs are internally wetted by the M-3410A. Application of external voltage to these inputs may result in damage to the unit.

WARNING: DO NOT open live CT circuits. Live CT circuits should be shorted prior to disconnecting CT wiring to the M-3410A. Death or severe electrical shock can occur.

Figures 2-7 through 2-15 contain external connection information that may be required for installation.

To fulfill requirements for UL and CSA listings, terminal block connections must be made with No. 12 AWG solid or stranded copper wire inserted in an AMP #324915 (or equivalent) connector, and wire insulation used must be rated at 60° C minimum.

Grounding Requirements

The M-3410A is designed to be mounted in an adequately grounded metal panel, using grounding techniques (metal-to-metal mounting) and hardware that assures a low impedance ground.

Unit Isolation

Sensing inputs should be equipped with test switches and shorting devices where necessary to isolate the unit from external potential or current sources.

A switch or circuit breaker for the M-3410A's power shall be included in the building installation, and shall be in close proximity to the relay and within easy reach of the operator, and shall be plainly marked as being the power disconnect device for the relay.

Insulation Coordination

- Sensing Inputs: 69 V to 480 V, Installation Category IV, Transient Voltages not to exceed 5,000 V
- Power Supply Mains: Installation Category II, Transient Voltages not to exceed 2,500 V

Torque Requirements

Terminals 1 to 28: 8.5 in-lbs (0.9605 Nm) minimum, and 9.0 in-lbs (1.0170 Nm) maximum

Relay Outputs

All outputs are shown in the de-energized state for standard reference. Relay standard reference is defined as protective elements in the non-trip, reconnection and sync logic in the non-asserted state, or power to the relay is removed.

Replacement Fuses

F1 and F2 replacement fuses must be Wickmann Model TR5, rated at 250 V, 3.15 A (Beckwith Electric Part Number 420-00902).

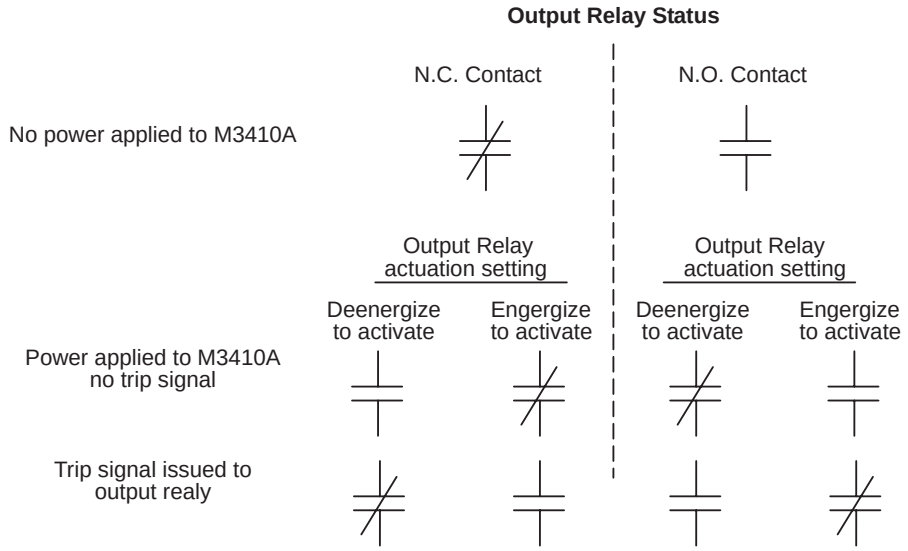

Figure 2-6 Output Relay Actuation Setting

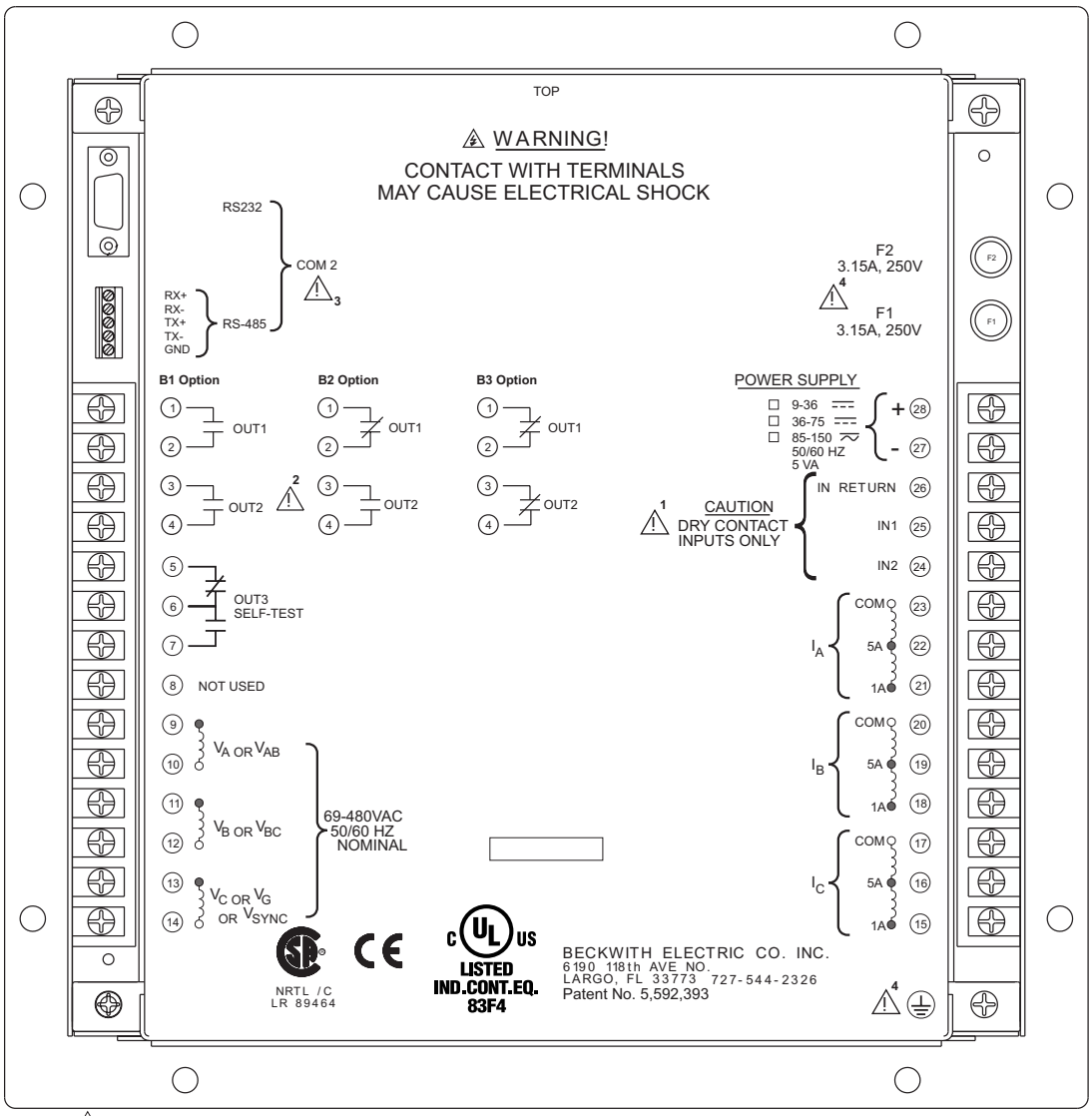

■ **NOTES**: ⚠

1. See Section 2.3, External Connections.
2. See Section 3.1, Relay Configuration, Output Contact Mode.
3. See Section 2.9, Relay Remote Communication Setup (PC), COM2 Configuration.
4. See Section 2.3, External Connections.

Figure 2-7 External Connections

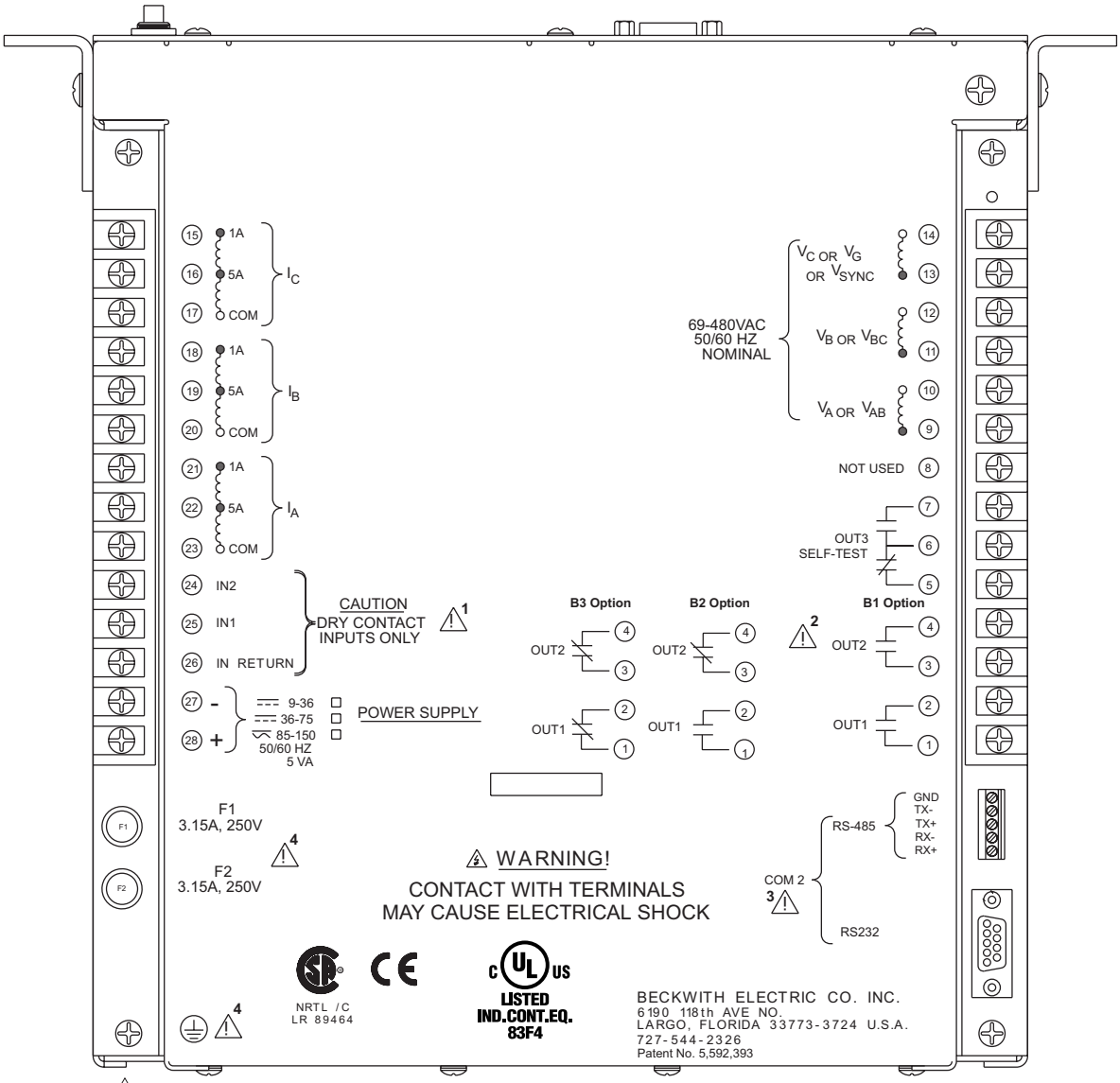

■ **NOTES**: ⚠

1. See Section 2.3, External Connections.
2. See Section 3.1, Relay Configuration, Output Contact Mode.
3. See Section 2.9, Relay Remote Communication Setup (PC), COM2 Configuration.
4. See Section 2.3, External Connections.

Figure 2-8 Optional Horizontal and Vertical Panel External Connection Layout

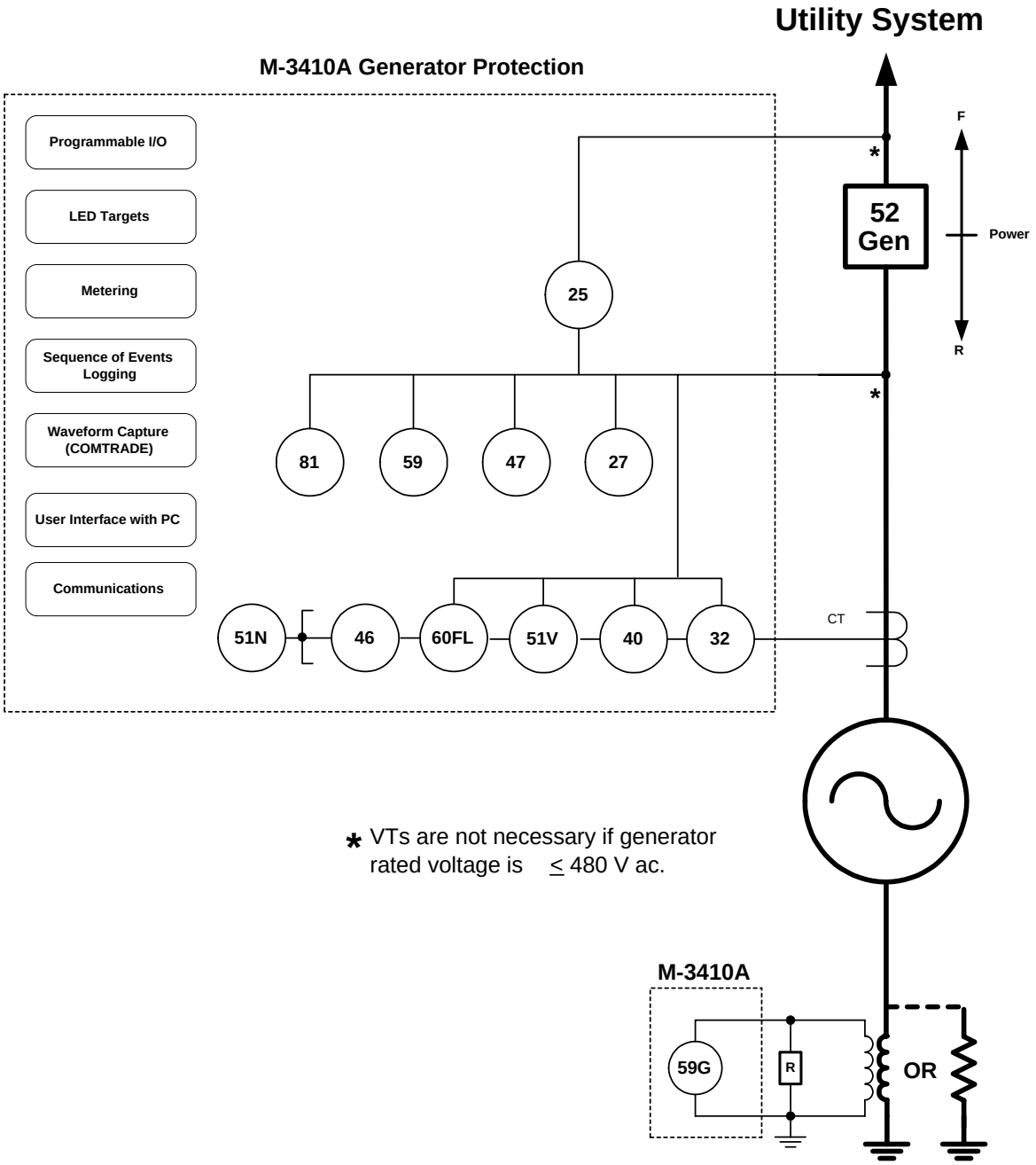

Figure 2-9 One-Line Connection Diagram - Generator Protection

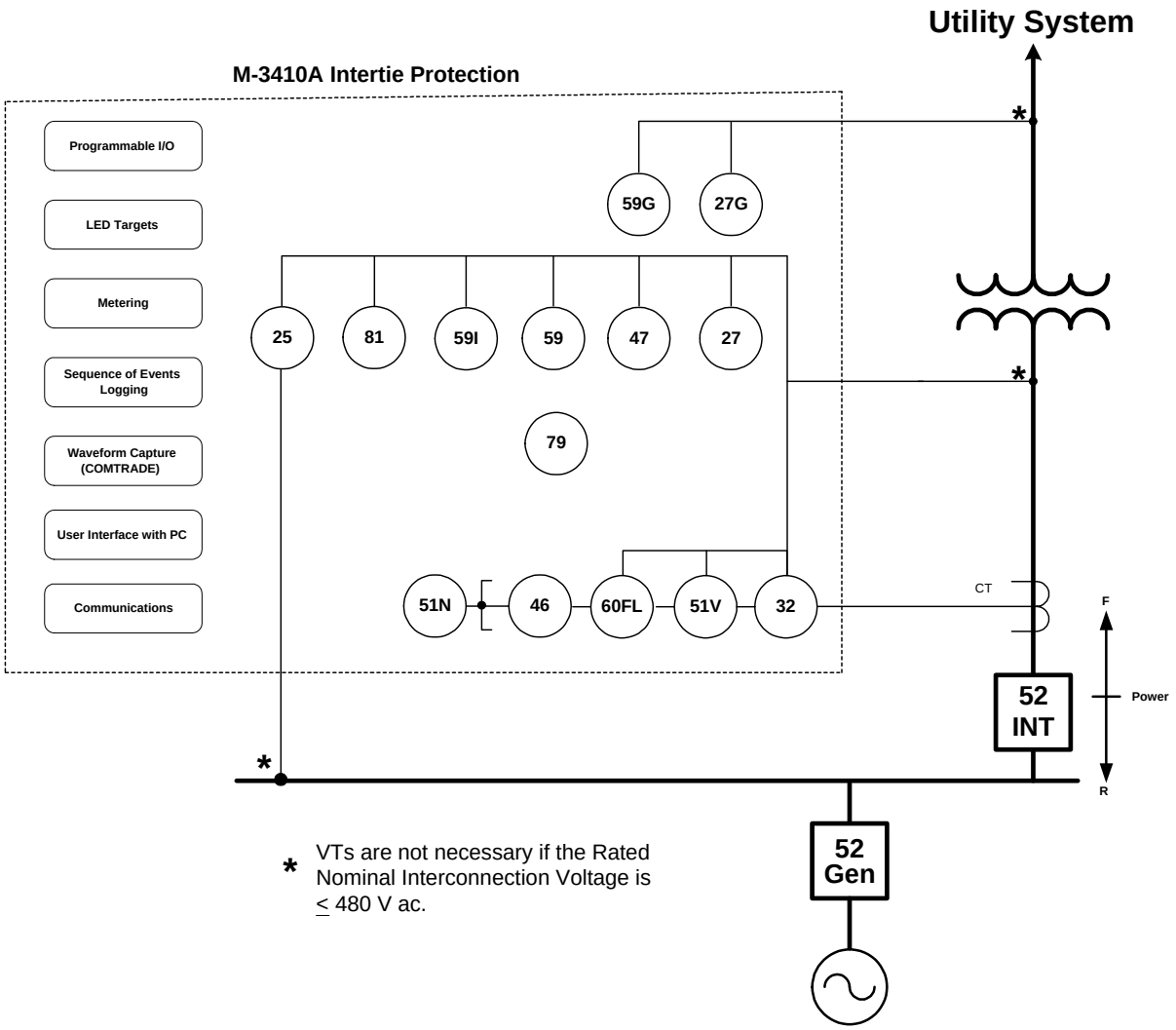

Figure 2-10 One-Line Connection Diagram - Intertie Protection

M-3410A Typical Connection Diagram

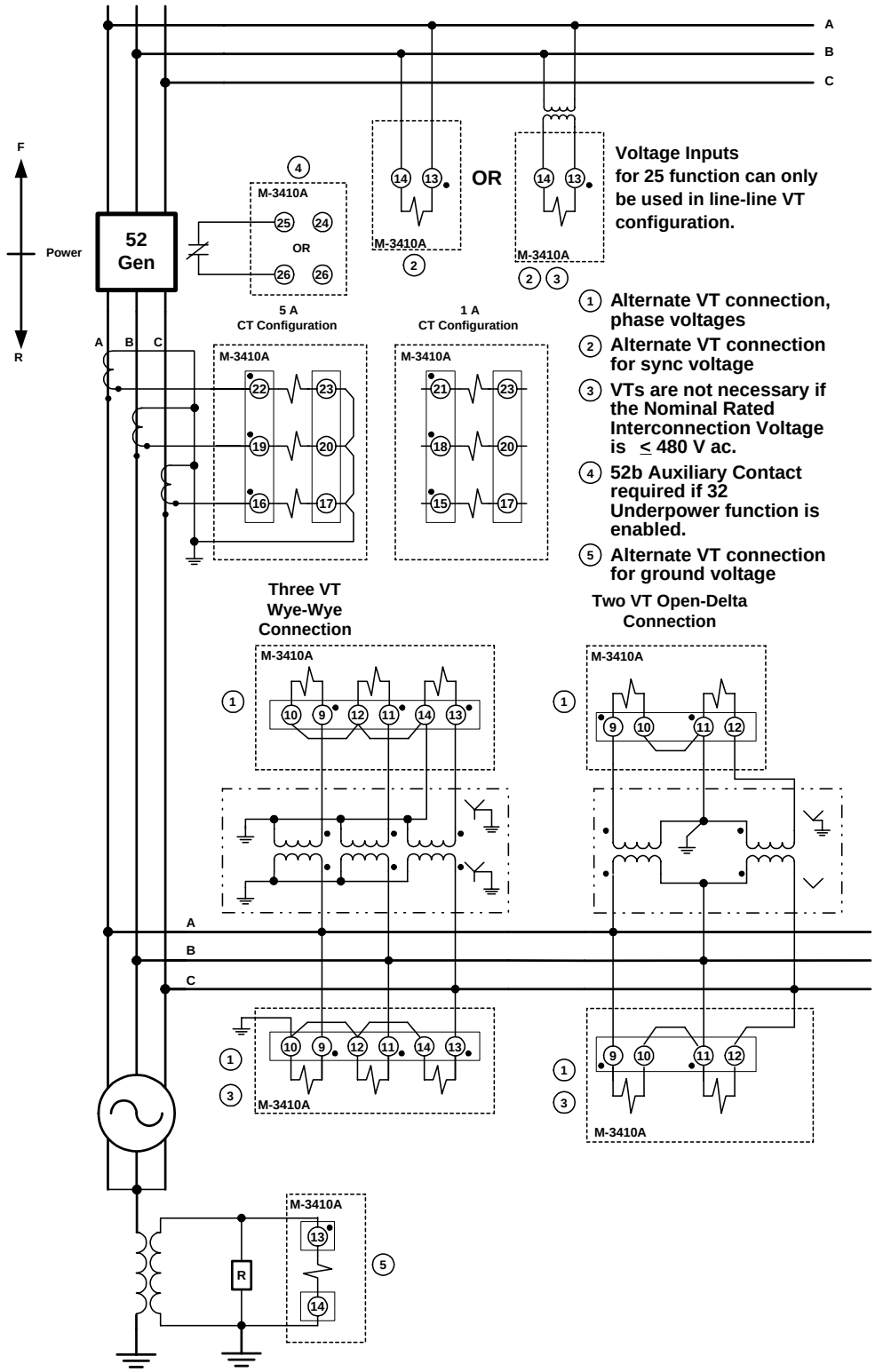

Figure 2-11 Three-Line Connection Diagram - Generator Protection

M-3410A Typical Connection Diagram

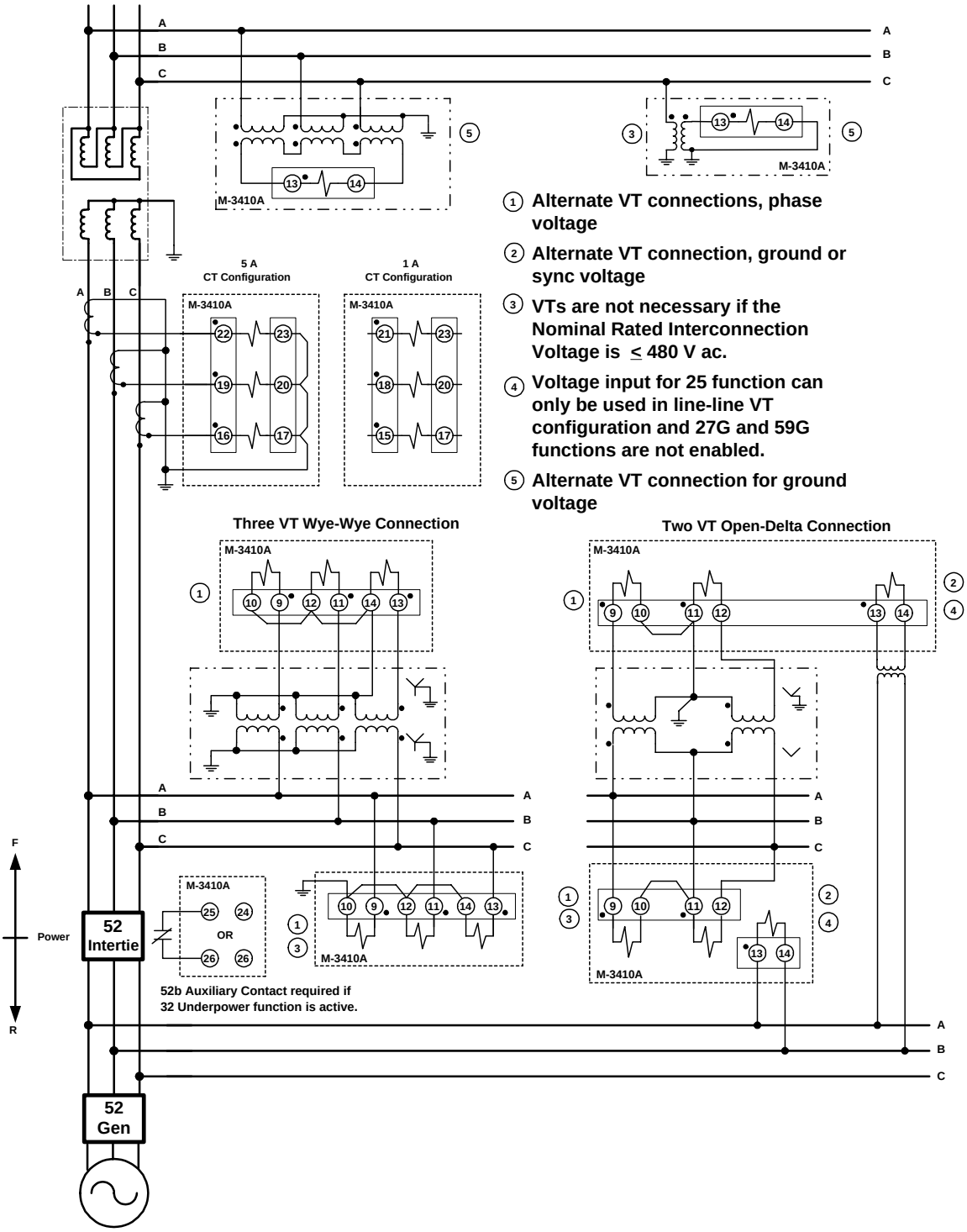

Figure 2-12 Three-Line Connection Diagram - Intertie Protection

M-3410A Typical Single-Phase Three-Wire Connection Diagram

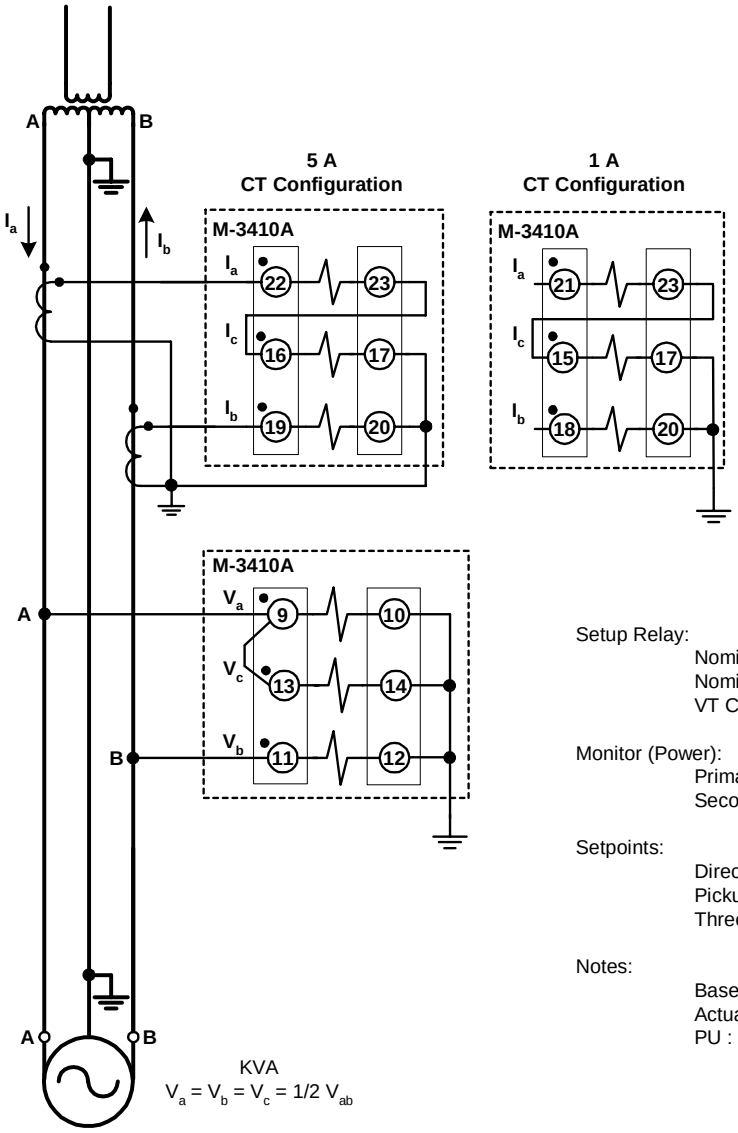

Setup Relay:

Nominal Voltage (V_{nom}) : V_a or V_b or 1/2 V_b
Nominal Current (I_{nom}) : I_a/CT Ratio or I_b/CT Ratio
VT Configuration : Line-to-Ground

Monitor (Power):

Primary Status : 1.5 X Actual Power
Secondary Status : One Per Unit of Base Power

Setpoints:

Directional Power (32)
Pickup : Set at PU of 2 X KVA
Three-Phase Detection : Disabled

Notes:

Base Power = 3 X V_{nom} X I_{nom}
Actual Power = 2 X V_{nom} X I_{nom}
PU : Per Unit (%/100)

Figure 2-13 Single-Phase Three-Wire Connection Diagram

M-3410A Alternate Single-Phase Two-Wire Connection Diagram

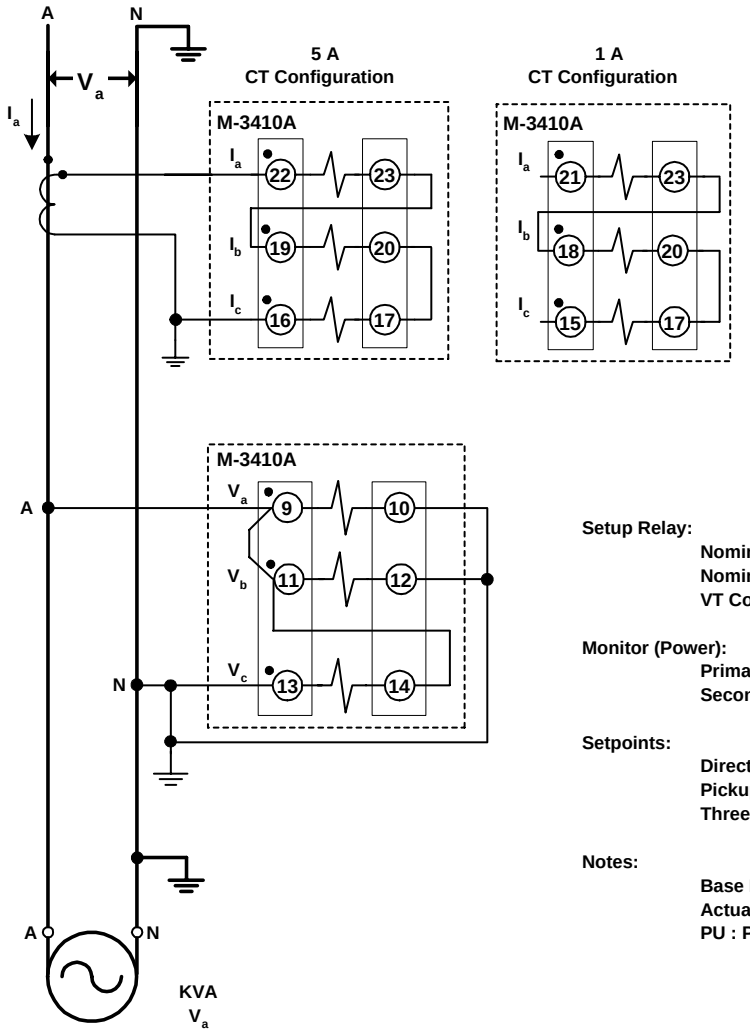

Setup Relay:

Nominal Voltage (V_{nom}) : V_a
Nominal Current (I_{nom}) : I_a/CT Ratio
VT Configuration : Line-to-Ground

Monitor (Power):

Primary Status : 3.0 X Actual Power
Secondary Status : One Per Unit of Base Power

Setpoints:

Directional Power (32)
Pickup : Set at PU of 1 X KVA
Three-Phase Detection : Disabled

Notes:

Base Power = 3 X V_{nom} X I_{nom}
Actual Power = 1 X V_{nom} X I_{nom}
PU : Per Unit (%/100)

Figure 2-14 Single-Phase Two-Wire Connection Diagram

M-3410A Alternate Single-Phase Two-Wire Connection Diagram

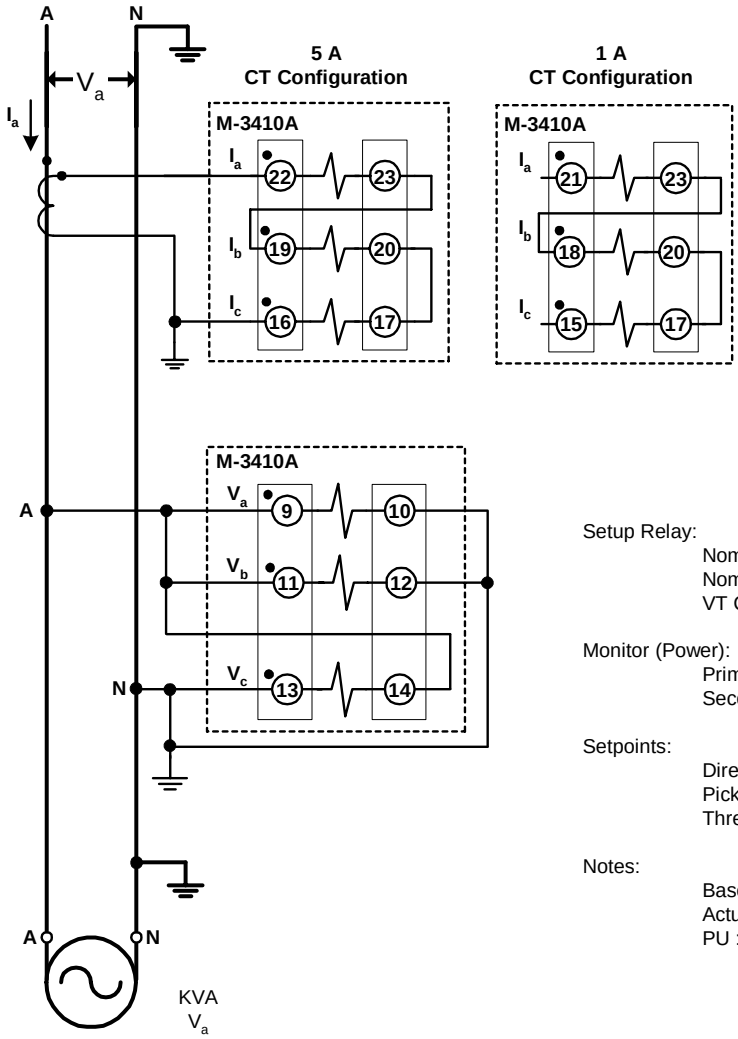

Setup Relay:

Nominal Voltage (V_{nom}) : V_a
Nominal Current (I_{nom}) : I_a/CT Ratio
VT Configuration : Line-to-Ground

Monitor (Power):

Primary Status : 3.0 X Actual Power
Secondary Status : Per Unit of Base Power

Setpoints:

Directional Power (32)
Pickup : Set at PU of 1 X KVA
Three-Phase Detection : Disabled

Notes:

Base Power = 3 X V_{nom} X I_{nom}
Actual Power = 1 X V_{nom} X I_{nom}
PU : Per Unit (%/100)

Figure 2-15 Alternate Single-Phase Three-Wire Connection Diagram

2.4 IPScom® Communications Software

Overview

M-3810A IPScom for Windows™ Communications Software provides both local and remote communication with the M-3410A Intertie/Generator Protection Relay using a PC. The M-3811A IPScom for Palm OS® Communications Software provides only local communication with the M-3410A. IPScom for Palm OS provides all IPScom features with the exception of Calibration, Relay Software Update, Time Delay Display Units, and Communication parameters such as Com Retry, and Timeout.

This section describes how to establish initial local communication with the relay. Remote communication with the relay utilizing modems is addressed in Section 2.9, **Relay Remote Communication Setup (PC)**.

Equipment such as RTU's, PLC's, Communication/ Logic Processors, data concentrators, modems, or computers can be interfaced for direct, on-line, real time data acquisition and control.

The M-3410A Intertie/Generator Protection Relay provides a front panel RS-232 communication port COM1 and a rear port COM2 that may be configured by the user to RS-232 (default) or RS-485. The front panel serial interface port, COM1, is a standard 9-pin, RS-232, DTE-configured port. The front-panel port, COM1, can be used to locally set and interrogate the relay using a temporary connection to a PC, laptop computer, Handspring™ Visor™ Deluxe, or Palm Handheld. Either port, COM1 or COM2, may be used to remotely set and interrogate the relay using a modem or other direct serial connection.

Communication Protocol

MODBUS communication protocol is implemented in the relay. Only the RTU mode of the MODBUS protocol is supported. The following functions are implemented in IPScom using MODBUS protocol:

- Real-time monitoring of measured parameters
- Interrogation and modification of setpoints
- Downloading of recorded oscillograph data and sequence of events data
- Configuration of all relay functions

System Requirements

M-3810A IPScom for Windows runs with the Microsoft Windows 95 operating system or later.

M-3811A IPScom for Palm OS runs with the Palm OS Version 3.1 or later.

IPScom is available on the following media:

- CD-ROM
- available for download from our website at www.beckwithelectric.com

The M-3810A IPScom for Windows Communications Software package is not copy-protected and can be copied to a hard disk. For more information about your specific rights and responsibilities, see the licensing agreement enclosed with your software or contact Beckwith Electric at www.beckwithelectric.com.

Hardware Requirements

M-3810A IPScom for Windows will run on any IBM PC-compatible computer that provides at least the following:

- Microsoft Windows 95 or later
- CD ROM
- One serial (RS-232) communication port

M-3811A IPScom for Palm OS requires either a Palm Handheld or Handspring Visor Deluxe that provides at least the following:

- Palm OS 3.1 or later
- 8 Mb of RAM
- An RS-232 serial cradle or equivalent, and a male-male gender changer

2.5 M-3810A IPScom for Windows Installation and Setup

1. Insert the software into your CD ROM.
2. Select Run from the Start Menu.
3. In the Run dialog box, initiate software installation by typing either **D:\Setup** or **other drive designator\Setup**, depending on the drive in which the software is inserted.

4. The installation utility establishes a program folder (Becoware) and subdirectory (IPScom®). The default location for the application files is on drive C:, in the new subdirectory "IPScom" (C:\Program Files\Becoware\IPScom\M-3810A). After installation, the IPScom program icon (located in the Becoware directory) can be placed on the desktop.

Figure 2-16 IPScom Program Icon

2.6 M-3811A IPScom for Palm OS® Installation and Setup

Palm Desktop Software Installation (PC)

1. Insert the Palm Desktop Software (included with Visor or Palm Handheld) CD into the CD-ROM drive.
2. If the CD Autorun feature does not initialize, then proceed as follows:
   a. Select **Start/Run**.
   b. Select (CD-ROM designator)/Installation Software/Setup.exe, then select **OK**.
   c. Follow prompts to install software.

Handheld Initialization (Initial HotSync)

1. Verify that the **HotSync Manager** is running:
   a. HotSync status can be verified by observing the Systray for the **HotSync** Icon (Figure 2-17).
   b. If **HotSync** is not running, then select **Start/Programs/Palm Desktop/HotSync Manager**.
2. Verify the target Handheld is installed in the cradle.
3. Initiate HotSync by selecting the HotSync button on the cradle.
4. Respond to the appropriate prompts and input screens to name the handheld unit.

Figure 2-17 HotSync Icon

M-3811A IPScom for Palm OS (PC)

1. Insert the IPScom for Palm OS Software CD into the CD-ROM drive.
2. If the CD Autorun feature does not initialize, then proceed as follows:
   a. Select **Start/Run**.
   b. Select (CD-ROM designator)/IPScom for Palm OS/sfi_M3811avxxxxxx.exe (the xxxxxx portion of the file name is the release version) Installation Software/Setup.exe, then select **OK**.
   c. Follow prompts to install the M-3811A software.

M-3811A IPScom for Palm OS (Handheld)

1. Verify that the HotSync Manager is running:
   a. HotSync status can be verified by observing the Systray for the **HotSync** Icon (Figure 2-17).
   b. If **HotSync** is not running, then select **Start/Programs/Palm Desktop/HotSync Manager**.
2. From the Start Menu, select **Programs/Becoware/M3811A/Install M3811A Palm or Install M3811A Visor**, then verify that the **Install Tool** dialog box is displayed.
3. If multiple Desktop users are identified, then select the appropriate username in the Install Tool Dialog box.
4. Verify the file M-3811APalm.prc is displayed in the download directory (Figure 2-18), then select **Done**.

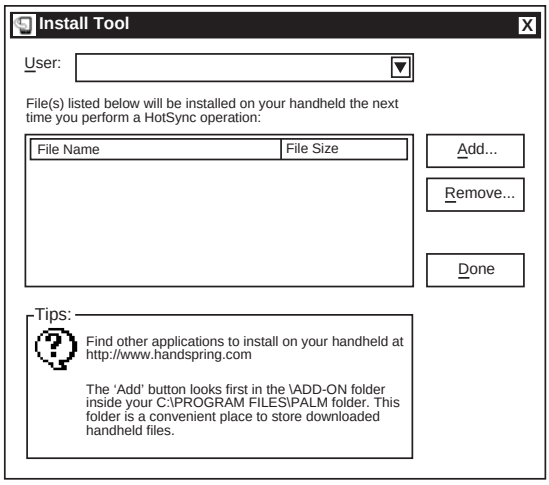

Figure 2-18 M-3811A IPScom® for Palm OS® Download Directory

5. Verify the target Handheld is mounted in the cradle.
6. Initiate HotSync by selecting the HotSync button on the cradle.
7. The desired IPScom for Palm OS program is now installed on the target handheld unit.

2.7 IPScom Communications Setup

Direct Connection

Local communication with the relay using direct serial connection requires the use of IPScom Communications Software and a serial cable. A "null modem" serial cable is required, with a 9-pin connector (DB9P) for the system, and an applicable connector for the computer (usually DB9S or DB25S). Pin-outs for a null modem adapter are provided in Appendix B, **Communications**. Visor™ and Palm™ units require a serial cradle or equivalent, and a male-male gender adapter.

An optional 10 foot null modem cable (M-0423) is available from the factory, for direct connection between a PC and the relay's front panel port COM1, or the rear COM2 port.

When fabricating communication cables, every effort should be made to keep cabling as short as possible. Low capacitance cable is recommended. The RS-232 standard specifies a maximum cable length of 50 feet for RS-232 connections. If over 50 feet of cable length is required, other technologies should be investigated, such as RS-485 or fiber optics.

Relay Setup for Local Communication

The initial setup of the relay for communication must be completed by direct serial connection.

Ensure the following conditions exist:

- Power is available to the relay
- Communications cable is installed
- IPScom Communications Software installed

The communications parameters are set from the IPScom Communication Dialog Box on a PC, and/or the **Connect** Dialog Box on a handheld.

Select the **Comm/Connect** menu in IPScom and set the following communication parameters in the **Communications** Dialog Box (Figure 2-19) or **Connect** Dialog Screen (Figure 4-35):

■ **NOTE:** This instruction addresses the initial communication between IPScom and the M-3410A. Therefore, factory default values are given in parentheses.

- **PC Port** (IPScom for Windows)
- **Baud Rate**: Standard baud rates from 300 to 19200 are available (9600)
- **Parity**: None, odd or even (None)
- **Stop Bits**: 1 or 2 (1)

Communication Access Code: If additional link security is desired, a communication access code can be programmed. Like the user access codes, if the communication access code is set to 9999 (default), communication security is disabled.

Relay Address: The relay address allows IPScom to communicate with multiple relays. The factory default value is one.

Echo Cancel: The Echo Cancel feature is used in conjunction with a Fiber Optic Loop or 2-wire RS-485 Loop and should not be selected for local communication.

Initiate communication with the relay by performing the following:

1. Select the **OPEN COM** for the active PC COM port for PC, or select **Connect**, then **OK** for the handheld unit.
2. If communication with the subject relay is successful, IPScom will then respond with "Access Granted" confirmation screen.
3. If communication with the subject relay is not successful, then verify the applicable steps and settings of this section.

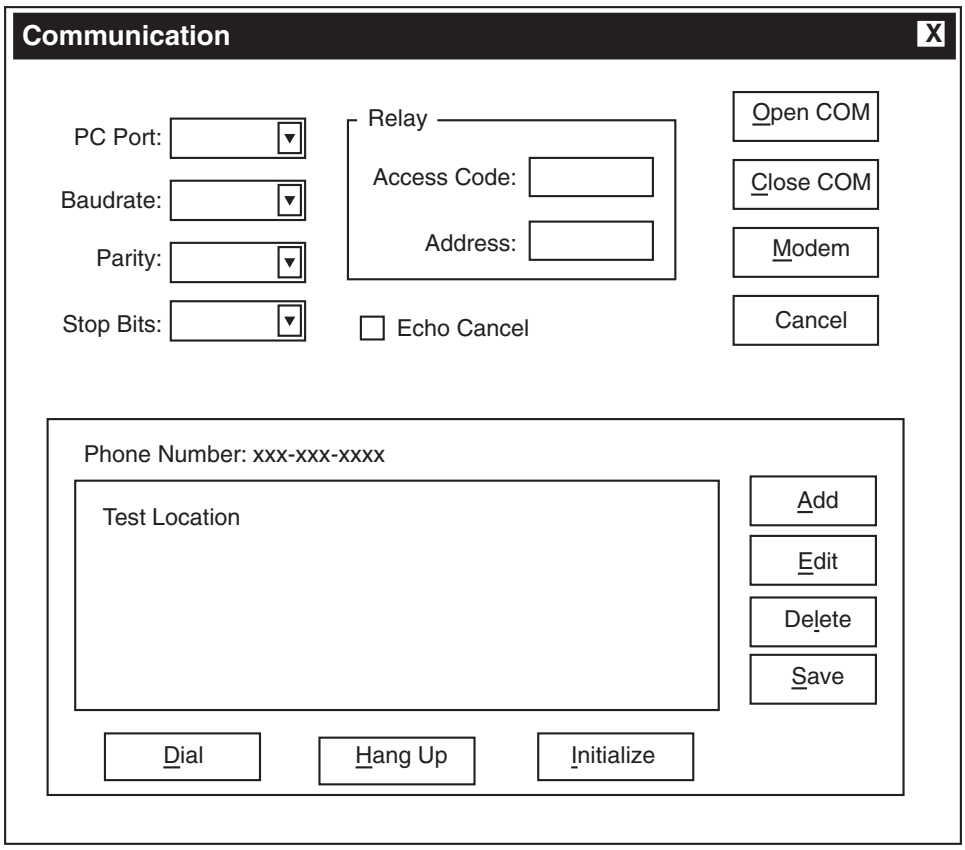

Figure 2-19 M-3810A IPScom® for Windows™ Communication Dialog Box

2.8 Commissioning Checkout

During field commissioning, check the following to ensure that the CT and VT connections are correct.

1. If using M-3810A IPScom® for Windows™, then select the **RELAY/ MONITOR** drop down menu and choose **Secondary Status** (see Figure 2-17)**.**
2. If using IPScom for Palm OS®, then select **Monitor/Secondary Status** (see Figures 2-20 through 2-21).
3. Compare these voltages and currents with actual measurements using a meter. If there is a discrepancy, check for loose connections to the rear terminal block of the unit. If line-ground -to-line-line voltage selection is used, the voltages displayed are √3 times the line-ground voltages applied.
4. The positive sequence voltage should be $V_{POS} \approx V_A \approx V_B \approx V_C$ or $V_{AB} \approx V_{BC.}$
5. The negative sequence voltage should be $V_{NEG} \approx 0$.
6. The zero sequence voltage should be $V_{ZERO} \approx 0$.

   If the negative sequence voltage shows a high value and the positive sequence voltage is close to zero, the phase sequence is incorrect and proper phases must be reversed to obtain correct phase sequence. If the phase sequence is incorrect, frequency and power related functions will not operate properly.

   If positive, negative and zero sequence voltages are all present, check the polarities of the VT connections and change connections to obtain proper polarities.
7. The positive sequence current should be $I_{POS} \approx I_a \approx I_b \approx I_c$.
8. The zero sequence current should be $I_{ZERO} \approx 0A$. If a significant amount of negative or zero sequence current (greater than 25% of I_A, I_B, I_C), then either the phase sequence or the polarities are incorrect. Modify connections to obtain proper phase sequence and polarities.

■ **NOTE:** The CT and VT polarities can be easily verified by observing the oscillographic waveforms using optional M-3801D IPSplot® *PLUS* Oscillograph Analysis software or with third party COMTRADE Format Viewer software.

9. The sign for Real Power should be positive for forward power and negative for reverse power. If a sign does not agree with actual conditions, check the polarities of the three CTs and/or the PTs (for forward and reverse power conventions see Figures 2-11 through 2-15).
10. Ensure all Error Codes are cleared (see Appendix C, **Self-Test Error Codes**).

If relay INPUT and OUTPUT tests are desired, then see Section 5.2, Diagnostic Test Procedures, for details.

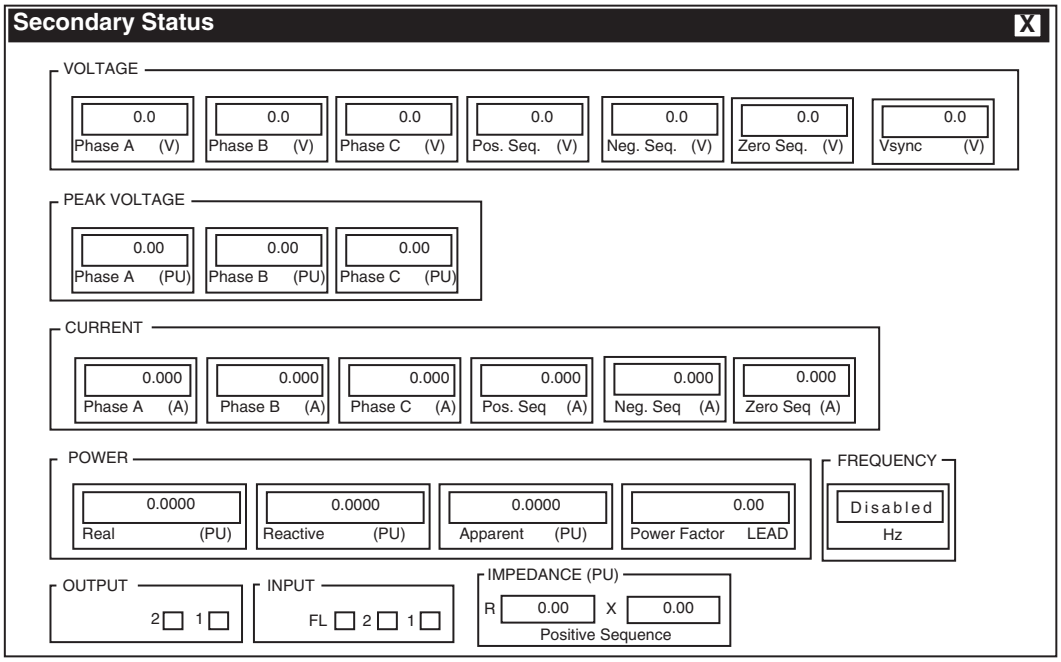

Figure 2-20 M-3810A IPScom® for Windows™ Secondary Status Screen

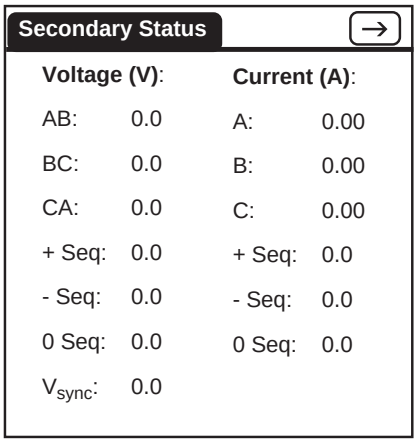

Figure 2-21 M-3811A IPScom for Palm OS® Secondary Status Screen #1

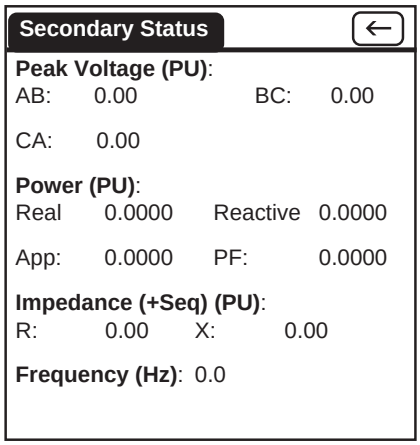

Figure 2-22 M-3811A IPScom for Palm OS Secondary Status Screen #2

2.9 Relay Remote Communication Setup (PC)

Overview

M-3810A IPScom® for Windows™ Communications Software provides remote communication with one or more M-3410A Intertie/Generator Protection Relays. This section contains the information necessary to configure IPScom and remote communications equipment for remote communication with multiple relays.

Equipment such as RTU's, data concentrators, modems, or computers can be interfaced for direct, on-line, real time data acquisition and control.

Communication Protocol

MODBUS communication protocol is implemented in the relay. Only the RTU mode of the MODBUS protocol is supported. The following functions are implemented in IPScom using MODBUS protocol:

- Real-time monitoring of measured and calculated parameters
- Interrogation and modification of setpoints
- Downloading of recorded oscillographic data and sequence of events data
- Configuration of all relay functions

Multiple System Application

The individual addressing capability of IPScom and the relay allows multiple systems to share a direct or modem connection when connected using a communications-line splitter (see Figure 2-23) are one communications line. The 6 unit limit is not a limit of the relay, but of the communications line splitter.

Serial Multidrop Network Application

Individual remote addressing also allows for communications through a serial multidrop network. Up to 32 relays can be connected using the same 4-wire RS-485 communications line.

Appendix B, Figure B-2 illustrates a setup of RS-232 Fiber Optic network, Figure B-3 illustrates a 2-wire RS-485 network, and Figure B-4 illustrates a 4-wire RS-485 network.

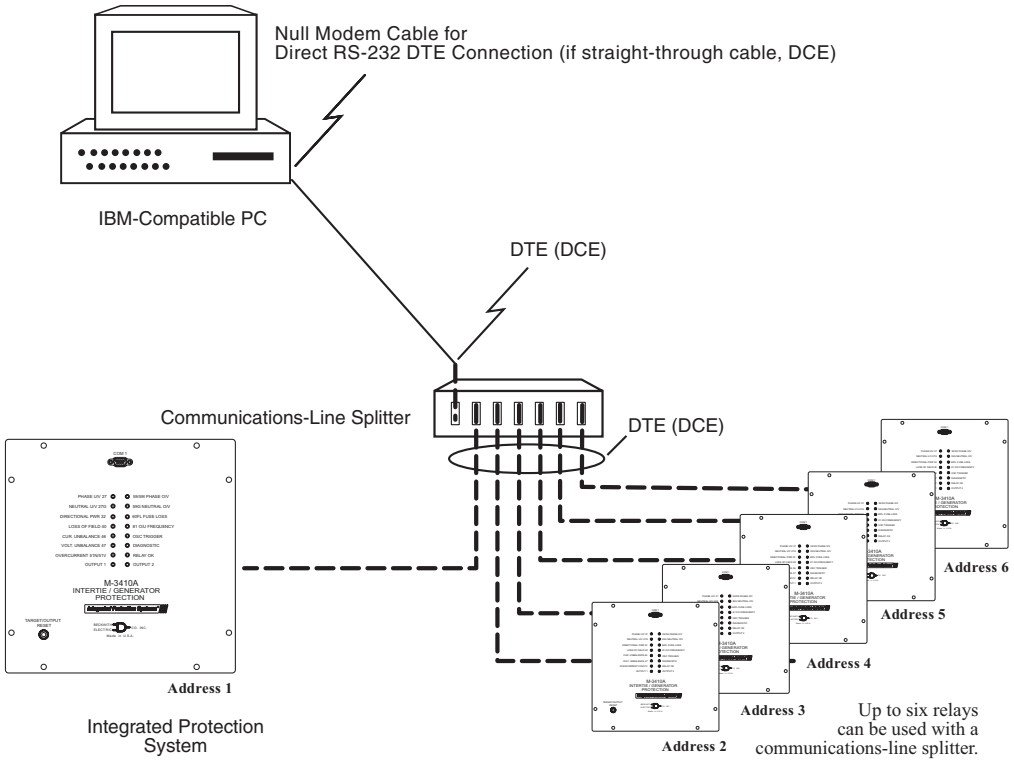

Figure 2-23 Multiple System Addressing Using Communications-Line Splitter

Other communication topologies are possible using the M-3410A Intertie/Generator Protection Relay. An Application Note, "*Serial Communication with Beckwith Electric's Integrated Protection System Relays*" is available by contacting Beckwith Electric Co., Inc., at www.beckwithelectric.com.

Installing the Modems

Using IPScom® to interrogate, set or monitor the relay using a modem requires both a remote modem connected at the relay location and a modem connected to the computer with IPScom installed.

In order to use IPScom to communicate with the relay using a modem, the following must be provided at the relay location:

■ **NOTE**: Any Hayes compatible modem may be used; however, the relay communicates between 300 and 19200 baud.

- An external modem, capable of understanding standard AT commands.
- Serial modem cable with 9-pin connector for the relay and the applicable connector for the modem.

Similarly, the computer running IPScom must contain an internal modem or have access to an external compatible modem.

The local modem (PC) can be initialized, using IPScom, by connecting the modem to the computer, and selecting the **Comm** menu in IPScom. Select **MODEM**, enter the required information, and finally select **INITIALIZE** from the expanded Communications dialog box. The following steps outline the initialized modem setup procedure:

1. Connecting the modem to the computer:
   a. If the computer has an external modem, use a standard straight-through RS-232 modem cable to connect the computer and modem (M-3933). If the computer has an internal modem, refer to the modem's instruction book to determine which communications port should be selected.
   b. The modem must be attached to (if external) or assigned to (if internal) the same serial port as assigned in IPScom. While IPScom can use any of the four serial ports (COM1 through COM4), most computers support only COM1 and COM2.
   c. Connect the modem to the telephone line and energize the modem.
2. Connecting the Modem to the Relay:

   Setup of the modem attached to the relay involves programming the parameters (using the AT command set), and storing this profile in the modem's nonvolatile memory.

   After programming, the modem will initialize in the proper state for communicating with the relay. Programming may be accomplished by using "Hyperterminal" or other terminal software. Refer to your modem manual for further information.

■ **NOTE**: The relay does not issue or understand any modem commands. It will not adjust the baud rate and should be considered a "dumb" peripheral. It communicates with 1 start, 8 data, and 1 stop bit.

   a. Connect the relay to an external modem by attaching a standard RS-232 modem cable to the appropriate serial communications port on both the relay and the modem.
   b. Connect the modem to the telephone line and energize the modem.

The modem attached to the relay must have the following AT command configuration:

E0	No Echo
Q1	Don't return result code
&D0	DTR, always on
&S0	DSR, always on
&C1	DCD ON when detected
S0=2	Answer on second ring

The following commands may also be required at the modem:

&Q6	Constant DTE to DCE
N0	Answer only at specified speed
W	Disable serial data rate adjust
\Q3	Bidirectional RTS/CTS relay
&B1	Fixed serial port rate
S37	Desired line connection speed

There are some variations in the AT commands supported by modem manufacturers. Refer to the hardware user documentation for a list of supported AT commands and the steps necessary to issue these commands.

Communications Address: For multidrop networks, each device must have a unique address.Individual relay communication addresses should be between 1 and 247.

Activating Communications

After any modems have been initialized, and M-3810A IPScom® for Windows™ configured, communication with the M-3410A is activated as follows:

1. Choose the IPScom for Windows icon from the Becoware folder.
2. The IPScom for Windows splash screen is displayed briefly, providing the software version number and copyright information. This information is also available by choosing the **About**... command from the **Help** menu.
3. Choose the **Comm** menu selection. Complete the appropriate information in the window for the relay to be addressed.
   a. If communication is through a modem, choose the **Modem** command button to expand the communications dialog box.
   b. Choose the desired relay location, then choose the **Dial** button. This action establishes contact and automatically opens communication to the relay.
   c. If the computer is connected through the front com port, choose the **Open COM** button. This action establishes communications.
4. Enter valid IPScom command(s) as desired.
5. To end communication when communicating by modem, choose the **Hang Up** command button from the expanded Communication dialog box. To close the communication channel when connected locally, choose the **Close COM** command button.

COM2 Configuration

COM2 is default configured for RS-232. To configure COM2 to RS-485, see Table 2-1.

2.10 Circuit Board Switches and Jumpers

See Figure 2-25, M-3410A I/O Board, or Figure 2-26, M-3410A Top-View CPU Board for Jumper locations.

JUMPER	POSITION	DESCRIPTION
IO Board JP2	1 to 2	RS-485 Terminator Off
	2 to 3	RS-485 Terminator On
IO Board JP3	1 to 2	COM2 RS-485
	2 to 3	COM2 RS-232
IO Board JP4	1 to 2	COM2 RS-232
	2 to 3	COM2 RS-485
CPU Board JP21	B-C	Flash Program Update ENABLED
CPU Board JP21	A-B	Flash Program Update DISABLED

Table 2-1 Jumpers

Accessing Jumpers

WARNING: Operating personnel must not remove the cover or expose the printed circuit board while power is applied. IN NO CASE may the circuit-based jumpers be moved with power applied.

WARNING: The protective grounding terminal must be connected to an earthed ground any time external connections have been made to the unit.

WARNING: DO NOT open live CT circuits. Live CT circuits should be shorted prior to disconnecting CT wiring to the M-3410A. Death or severe electrical shock can occur.

▲ **CAUTION:** This unit contains MOS circuitry, which can be damaged by static discharge. Care should be taken to avoid static discharge on work surfaces and service personnel.

1. De-energize the M-3410A.
2. Remove power, current, and potential inputs from the relay.

● **WARNING**: **The protective grounding terminal must be connected to an earth ground any time external connections have been made to the unit.**

3. Remove the screws that retain the rear/ top cover, lift the rear/top cover off the relay.
4. Reconnect protective grounding terminal (bottom right cover screw) to an earth ground.
5. JP2, JP3, and JP4 are now accessible. See Figure 2-24, M-3410A I/O board for locations.
6. JP21 is now accessible. See Figure 2-25, M-3410A CPU Board.
9. Reinstall the rear cover on the relay; insert the screws that retain the rear cover.
10. Connect power, current, and potential inputs to the relay.

Factory Default Reset

To reset all function settings to factory defaults, perform the following:

● **WARNING: Operating personnel must not remove the cover or expose the printed circuit board while power is applied. IN NO CASE may the circuit-based jumpers be moved with power applied.**

● **WARNING: The protective grounding terminal must be connected to an earthed ground any time external connections have been made to the unit.**

● **WARNING: DO NOT open live CT circuits. Live CT circuits should be shorted prior to disconnecting CT wiring to the M-3410A. Death or severe electrical shock can occur.**

▲ **CAUTION:** This unit contains MOS circuitry, which can be damaged by static discharge. Care should be taken to avoid static discharge on work surfaces and service personnel.

1. De-energize the M-3410A.

● **WARNING**: **The protective grounding terminal must be connected to an earth ground any time external connections have been made to the unit.**

2. Remove the screws that retain the rear cover, lift the rear cover off the relay.
3. Reconnect protective grounding terminal (bottom right cover screw) to an earth ground.
4. Connect a jumper across JP11 (Figure 2-26).
5. Apply power to the unit, then wait for the power-on self test to complete.
6. Remove power from the unit, then remove jumper from JP11.
7. Resinstall the rear cover on the relay; insert the screws that retain the rear cover.

To reset Communications setting to factory default, perform the following:

● **WARNING: Operating personnel must not remove the cover or expose the printed circuit board while power is applied. IN NO CASE may the circuit-based jumpers be moved with power applied.**

● **WARNING: The protective grounding terminal must be connected to an earthed ground any time external connections have been made to the unit.**

● **WARNING: DO NOT open live CT circuits. Live CT circuits should be shorted prior to disconnecting CT wiring to the M-3410A. Death or severe electrical shock can occur.**

▲ **CAUTION:** This unit contains MOS circuitry, which can be damaged by static discharge. Care should be taken to avoid static discharge on work surfaces and service personnel.

1. De-energize the M-3410A.

● **WARNING**: **The protective grounding terminal must be connected to an earthed ground any time external connections have been made to the unit.**

2. Remove the screws that retain the rear cover, lift the rear cover off the relay.
3. Reconnect protective grounding terminal (bottom right cover screw) to an earth ground.
4. Connect a jumper across JP13 (Figure 2-26).
5. Apply power to the unit, then wait for the power-on self test to complete.
6. Remove power from the unit, then remove jumper from JP13.
7. Reinstall the rear cover on the relay; insert the screws that retain the rear cover.

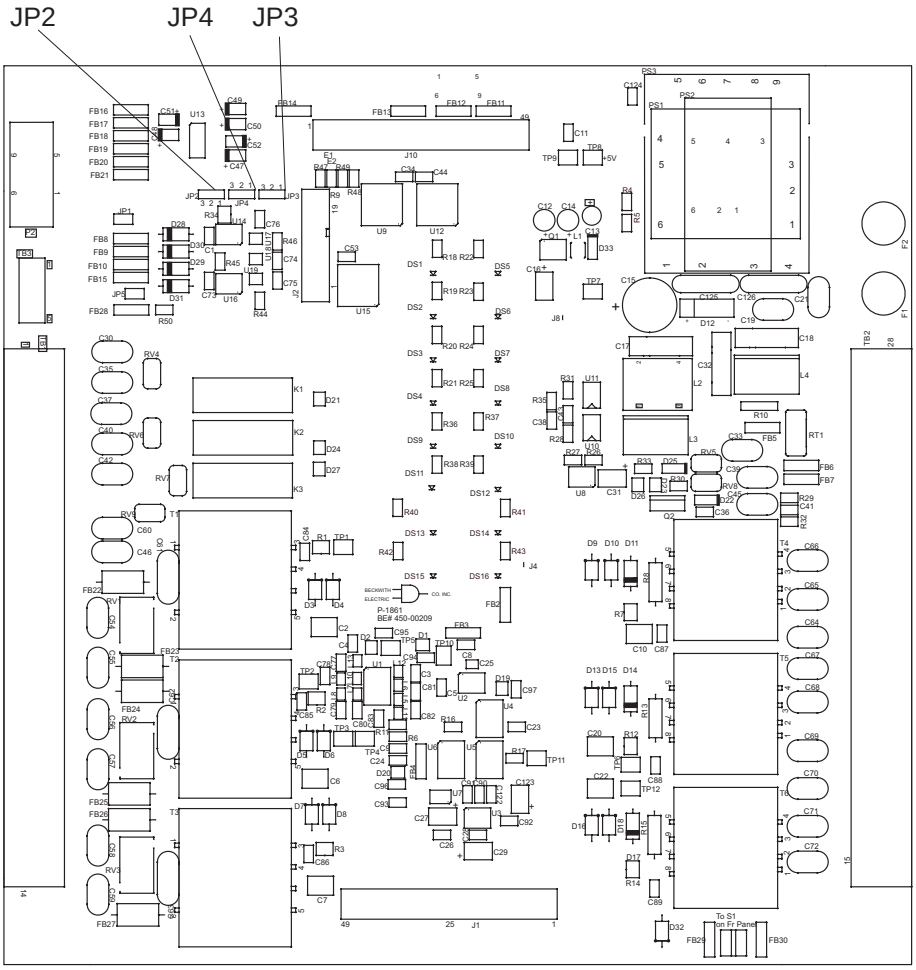

Figure 2-24 M-3410A IO Board

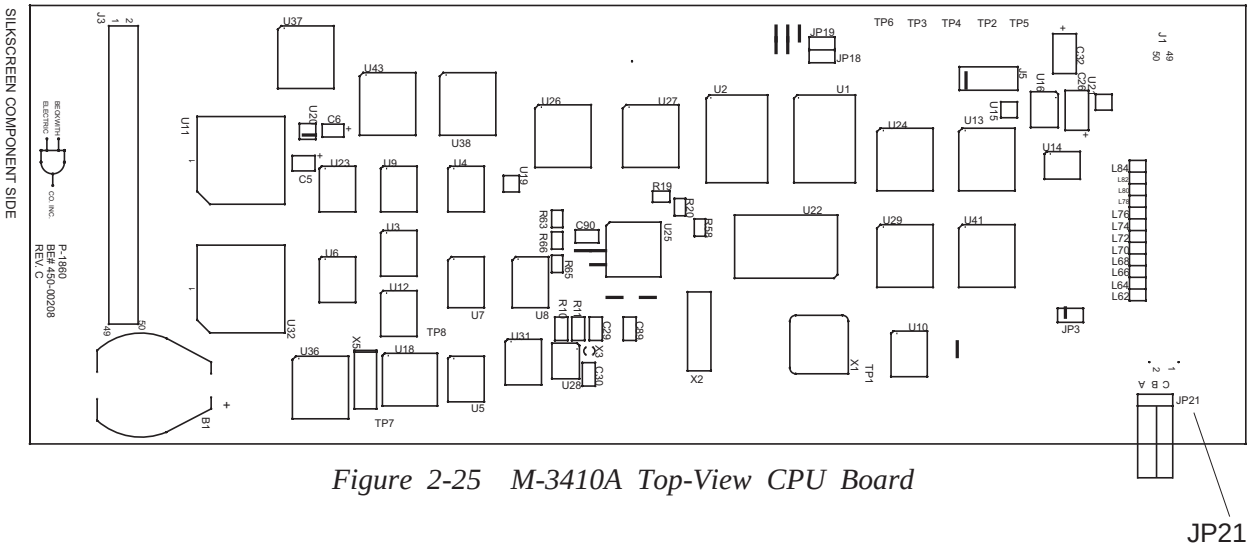

Figure 2-25 M-3410A Top-View CPU Board

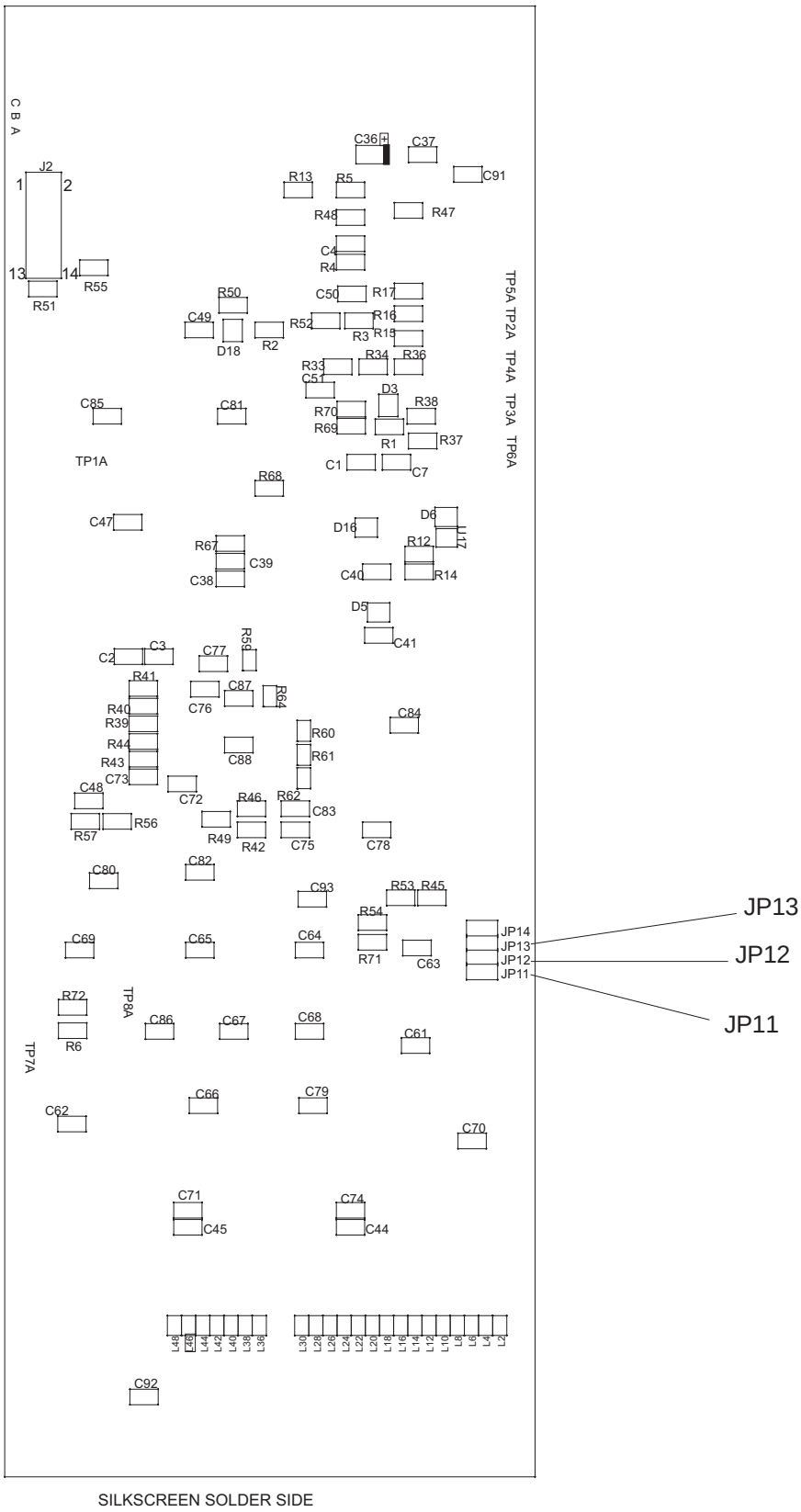

SILKSCREEN SOLDER SIDE

Figure 2-26 M-3410A Bottom-View CPU Board

This Page Left Intentionally Blank

3 Configuration and Settings

3.1 Relay Configuration 3–1

3.2 Setpoints and Time Settings 3–6

Chapter Three is designed for the person or group responsible for the configuration of the M-3410A Intertie/Generator Protection Relay. This chapter describes the configuration process for the unit (choosing active functions), output contact assignment and input blocking designation. It also illustrates the definition of system quantities, equipment characteristics required by the protective relay and describes the individual function settings.

Settings may be entered utilizing M-3810A IPScom® Communications Software (see Chapter 4, **Operation and Interface**).

3.1 Relay Configuration

Functions

Configuration of the relay consists of enabling the functions for use in a particular application, designating the output contacts each function will operate, and which control/status inputs will block the function. The choices include two programmable output contacts (OUT1 and OUT2) and two programmable inputs (IN1 and IN2). A self-test alarm contact is also provided.

Enabling a relay protective function consists of entering the required settings in the individual function screens. Disabling a protective function (whether settings have been entered or not) is accomplished by deselecting the individual protective function element numbers. When a protective function is disabled, screen values are grayed out.

The control/status inputs and output contact assignments must be chosen before entering the settings for the individual functions. Both should be recorded on the Relay Configuration Table in Appendix A, **Configuration Record Forms** for later use.

The relay configuration also includes the setup of the Oscillographic Recorder and Sequence of Events Recorder features. The oscillographic recorder provides the user with comprehensive data recording of all monitored waveforms, control/status input and output status, storing up to 120 cycles of nonvolatile data. The event recorder provides 32 nonvolatile, time stamped events that include functions operated, functions picked up and control/status input and output status.

Relay Setup

The relay setup consists of defining all pertinent information regarding certain relay actions and system quantities. The M-3810A IPScom® Setup Relay screen, Figure 3-1, below, is accessed through the **Relay/Setup, Setup Relay** menu. Regardless of the functions enabled or disabled, all information shown is required. Several functions require the proper setting of these values for correct operation. The Nominal Voltage and Nominal Current settings are needed for proper normalization of per unit quantities. CT and VT ratios are used only in monitoring and displaying system primary quantities.

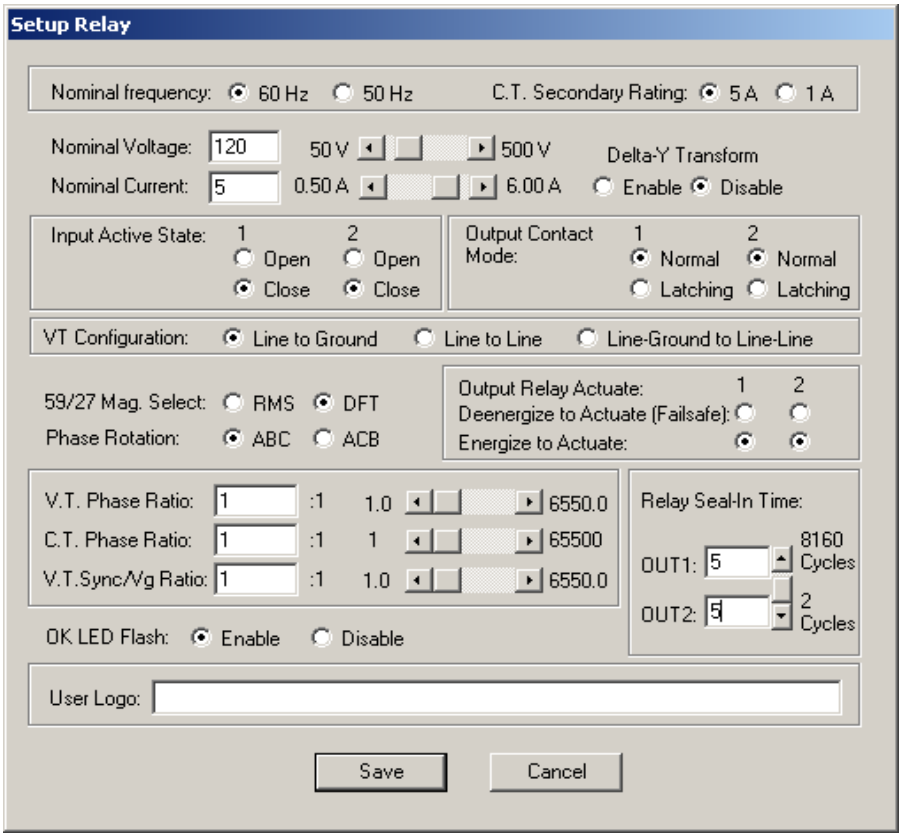

Figure 3-1 M-3810A IPScom Setup Relay Dialog Box

Path: Relay menu / Setup submenu / Setup Relay command

COMMAND BUTTONS

Save When connected to a protection system, sends the currently displayed information to the unit. When working offline (not connected to a relay) but modifying a file, saves the currently displayed information.

Cancel Returns you to the IPScom main window; any changes to the displayed information are lost.

■ **NOTES:** The “active” or asserted states for the individual status inputs are:

1. Selecting Close causes the “active” or “operated” condition to be initiated by the external contact *closing*.
2. Selecting Open causes the “active” or “operated” condition to be initiated by the external contact *opening*.

Nominal Frequency

This function allows the user to select the nominal frequency of the M-3410A to match the power system. Changes to Nominal Frequency will reset the 81 Function setpoints to their default values. Therefore, ensure that 81 Function setpoints are properly set any time the Nominal Frequency is changed.

CT Secondary Rating

This function allows the user to select the CT Secondary Rating to match the M-3410A Application (5 A or 1 A).

Nominal Voltage

The Nominal Voltage (V_{nom}) is defined as the phase voltage measured at relay terminals when the generator/interconnection is at rated voltage (V_{rated}). When line-gnd or line-line selection is used, $V_{nom} = V_{rated}/VT_{ratio}$. When line-ground-to-line-line selection is used, $V_{nom} = \sqrt{3} \times V_{rated}/VT_{Ratio}$.

Nominal Current

The Nominal Current (I_{nom}) is defined as the secondary CT current of the phase CT's when the CT primary current equal to the generator/interconnection rated current (I_{rated}) is given by $I_{nom}=I_{rated}$/CTratio.

Input Active State

This designates the "active" or asserted state for the individual status input:

- Selected Closed causes the "active" or "operated" condition to be initiated by the external contact *closing*.
- Selecting Open causes the "active" or "operated" condition to be initiated by the external contact *opening*.

Output Contact Mode

In the "normal" mode, when the condition for assertion has been removed, the energized relay coil will de-energize automatically after the corresponding seal-in timers have expired. If the seal-in timer has already expired, the output contact will de-energize immediately.

If "latching" is selected, the output will stay energized until manually reset from IPScom® or by pressing the **TARGET/OUTPUT RESET** pushbutton. The latch condition is maintained as long as power is applied to the relay.

VT Configuration

Indicates VT connection. (See Figure 2-10 through 2-14) When line-ground voltages are used, functions 27, and 59 may operate for line-ground faults. If this is not desired, the line-gnd-to-line-line selection should be used to prevent operation of these functions for line-ground faults.

When line-gnd-to-line-line is selected, the relay internally calculates line-line voltages from line-ground voltages for all voltage sensitive functions. This line-gnd-to-line-line selection should be used only for a VT nominal secondary voltage of 277 V or below. For this selection, the nominal voltage setting entered should be line-line nominal voltage, which is $\sqrt{3}$ times line-ground nominal voltage.

When line-gnd or line-gnd-to-line-line selection is used, functions 27G, 59G and 25 are not available. When line-line selection is used, the 3rd input voltage can be connected to neutral voltage (or $3V_0$) for 27G and 59G functions, or it can be used for 25 function. Hence, when 27G and 59G are used, 25 function is not available and vice versa. Also, when line-line or line-gnd-to-line-line selection is used, the 32 function can only be set to 3-phase power measurement, and not single-phase.

59/27 Magnitude Select

This function allows the use of RMS (Root-Mean-Squared) or DFT (Discrete Fourier Transform) derived values for the 59 and 27 functions. The impact of the selection:

- RMS – provides RMS value of the total waveform, including all harmonics.
- DFT– provides the RMS value of the fundamental waveform (50 or 60 Hz, depending on system nominal frequency)

When the RMS option is selected, the resulting calculation is accurate over a wide frequency range (10 to 80 Hz), and the 27 or 59 element time response can be slowed by up to 20 cycles. When the DFT option is selected, the resulting calculation is accurate near the fundamental frequency (50 or 60 Hz, depending on system nominal frequency), and the element time response is accurate to ±2 cycles. For generator protection purposes, the RMS option is recommended. The factory default setting for this option is RMS.

Phase Rotation

This function allows the user to select the phase rotation of the M-3410A to match that of the power system (ABC or ACB).

Ratio of the Phase VTs/CTs

These ratios are used to calculate the primary values displayed in the Primary Status Screen Box, See Figure 4-25, Primary Status Dialog Box.

Relay Seal-in Time

For outputs that are opearted by protective functions (not 25), the minimum time the output contact will remain picked up to ensure proper seal-in, regardless of the subsequent state of the initiating function. Individual Seal-In settings are available for all outputs.

For outputs that are operated by Function 25, the seal-in time must be set to minimum. This ensures that the sync permissive contact opens when the phase angle is out of the setting window.

OK LED Flash

This function allows the user to select the OK LED to flash (instead of solid) when the relay self-test does not detect an error condition.

User Logo

Allows the user to input text to identify the relay by name.

Oscillograph Setup

The oscillograph recorder is capable of storing 120 cycles of data. The total record length can be configured for one (120 cycles) or two (80 cycles each) partitions. When untriggered, the recorder continuously records waveform data, keeping the data in a buffer memory. A programmable post trigger delay (5 to 95%) is incorporated to capture breaker operation. Storage of oscillograph records is nonvolatile and will be retained even without power as long as the on-board battery is healthy.

The general information required to complete the oscillograph setup includes:

- **Recorder Partitions**: The recorder's memory may be partitioned into 1 record of 120 cycles, or 2 records of 80 cycles each. When triggered, the time stamp is recorded, and the recorder continues recording for a user-defined period (5 to 95%).

  The snapshot of the waveform is stored in memory for later retrieval using IPScom Communications Software. If additional events or triggers occur before downloading, and the number of events exceeds the number of partitions being used, then the oldest record will be overwritten. The **OSC TRIG** LED on the front panel will indicate a recorder operation (data is available for downloading).
- **Trigger Inputs and Outputs**: The oscillograph recorder can be triggered remotely through the serial communications interface or automatically using the assertion of control/status inputs (IN1 or IN2) or outputs (OUT1 or OUT2), if designated to do so.
- **Post-Trigger Delay**: A post-trigger delay of 5% to 95% must be specified. After triggering, the recorder will continue to store data for the programmed portion of the total record before rearming for the next record. For example, a setting of 80% will result in a record with 20% pretrigger data, and 80% post-trigger data.

Path: Relay/Oscillograph/Setup

COMMANDS

Send	Sends all entered information to the control.
Cancel	Returns you to the previous window; any changes to displayed information are lost.

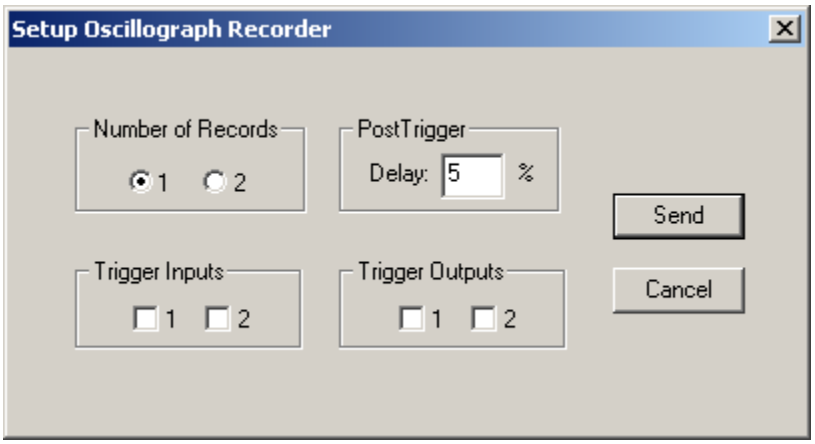

Figure 3-2 M-3810A IPScom® Setup Oscillograph Recorder Dialog Box

Event Recorder Setup

The event recorder is designed to record sequence of events in the M-3410A relay. A total of 32 events can be recorded. After 32 events have been recorded the earliest events will be overwritten with new events (FIFO). The stored events are retained during power failure to the relay. The event recorder records a new event when an output contact is asserted.

In addition, the event recorder can be configured to trigger on the pickup of the desired functions, timeout of desired functions, dropout of desired functions, or change of the control/status inputs.

The M-3410A includes two event recorder modes of operation. Mode 1 records all events, and Mode 2 records events that are only succeeded by an operation of an output contact. If a function picks up but does not time-out (does not cause a contact to operate) no events are recorded. Select the event recorder operational mode.

Path: Relay/Event Recorder/Setup

COMMAND BUTTONS

Save	Saves all displayed changes to control.
Cancel	Returns to previous window; any changes made to displayed information will be lost.

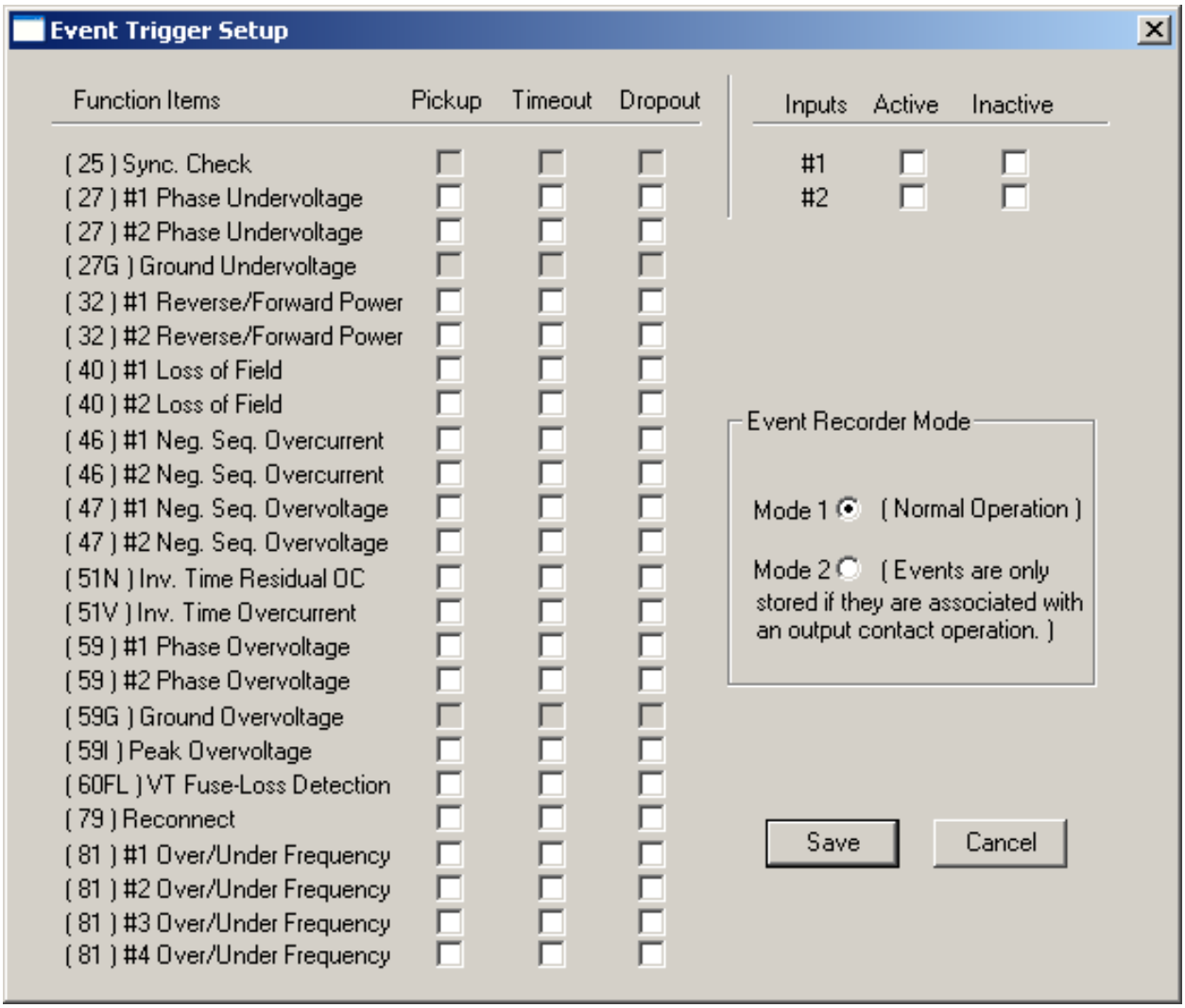

Figure 3-3 M-3810A IPScom® Setup Event Recorder Trigger Dialog Box

3.2 Setpoints and Time Settings

The individual protective functions, along with their magnitude and timing settings are described in the following pages. Settings are entered utilizing the M-3810A IPScom® Communications Software.

Enabling a relay protective function consists of entering the required settings in the individual function screens. Disabling a protective function from IPScom for Windows (whether settings have been entered or not) is accomplished by deselecting the individual protective function element numbers. When a protective function is disabled, screen values are grayed out.

25 Sync Check

The Synchronism (Sync) Check function (25) is used to ensure that the voltage magnitude, phase angle, and frequency of two sources are within acceptable limits before closing a circuit breaker to unite them. This function may be applied across the intertie breaker to ensure that the Dispersed Generation (DG) is in sync with the Utility, or across an individual generator breaker to ensure that the generator is in sync with the bus.

The sync check function has phase angle, delta frequency, and delta voltage checks.

The sync phase voltage (V_1) can be selected as V_{AB} or V_{BC}. The V_{sync} input (denoted as V_2) must be connected to the same phase to phase voltage input as the selected sync phase.

Phase Angle Check

The phase angle check is considered OK when the selected sync phase voltage (V_1) and DG voltage (V_2) are within the Upper Volt Limit and Lower Volt Limit window and the measured phase angle is within the phase angle window.

Phase angle window is defined as twice the Phase Limit setting. For example, if the Phase Limit is set at 10 degrees, a phase angle window of 20 degrees exists between –10 (350) degrees and +10 degrees. The basic phase angle check is shown in Figures 3-4 and 3-5.

Delta Voltage and Delta Frequency Check

Delta voltage and delta frequency elements may be individually enabled or disabled, as desired. Delta voltage check will compare the absolute difference between the selected sync phase voltage (V1) and the measured DG voltage (V2) with the Delta Volt limit setting. Likewise, the delta frequency measures the frequency difference between V1 and V2 voltage signals. The logic diagram of the above is shown in Figures 3-4 and 3-5.

Dead Line/Dead Bus Check

The Dead Volt Limit defines the Hot/Dead voltage level used in deadline/dead bus closing schemes. When the measured V2 voltage is equal to or below the Dead Volt Limit, V2 is considered dead. When the measured V2 is above the Dead Volt Limit, V2 is considered hot. The opposite side of the breaker uses the positive sequence voltage measurement ($V1_{pos}$) for 3-phase consideration in determining hot/dead detection. Different combinations of hot line/dead bus closings may be selected, depending on how the buses are referenced. Figure 3-4 illustrates enabling/disabling of the dead line/dead bus scheme through contact inputs.

Dead Line/Dead Bus Check Input Initiate

The Dead V1/Hot V2, Dead V2/Hot V1, and Dead V1/Dead V2 enable are software switches used to enable the dead line/dead bus logic. Further conditioning can be performed on the dead detection logic by selecting one or more input contacts (Dead Input Initiate) to control the enabled dead detection element. For example, if INPUT2 (I2) is selected under the Dead Input Initiate screen, and both the Dead V1 and Dead V2 elements are enabled, the dead check timer will start when INPUT2 is activated, and either V1 Dead V2 Hot or V1 Hot V2 Dead. This allows for external control of the desired dead closing scheme. Dead Input Initiate selections are common to all dead detection elements. If no inputs are selected under the Dead Input Initiate screen, and any dead element is enabled, the dead check timer will start immediately when the dead condition exists. Figures 3-4 and 3-5 illustrate enabling/disabling of the Dead Line/Dead Bus scheme through contact inputs.

Eventually, the Dead Line/Dead Bus check, Phase Angle check, Delta Volt and Delta Frequency checks all combine through their appropriate timers and are directed to the programmed 25 output relay. The overall logic of the Sync Check (25) function is illustrated in Figures 3-4 and 3-5.

Supervision of 25 by 79

The Sync Check function (25) can be supervised by the reconnect enable (79) function. The “79 supervise 25” setting (Figure 3-5), if enabled, will hold both the dead check and sync check timers reset until the 79 timer expires.

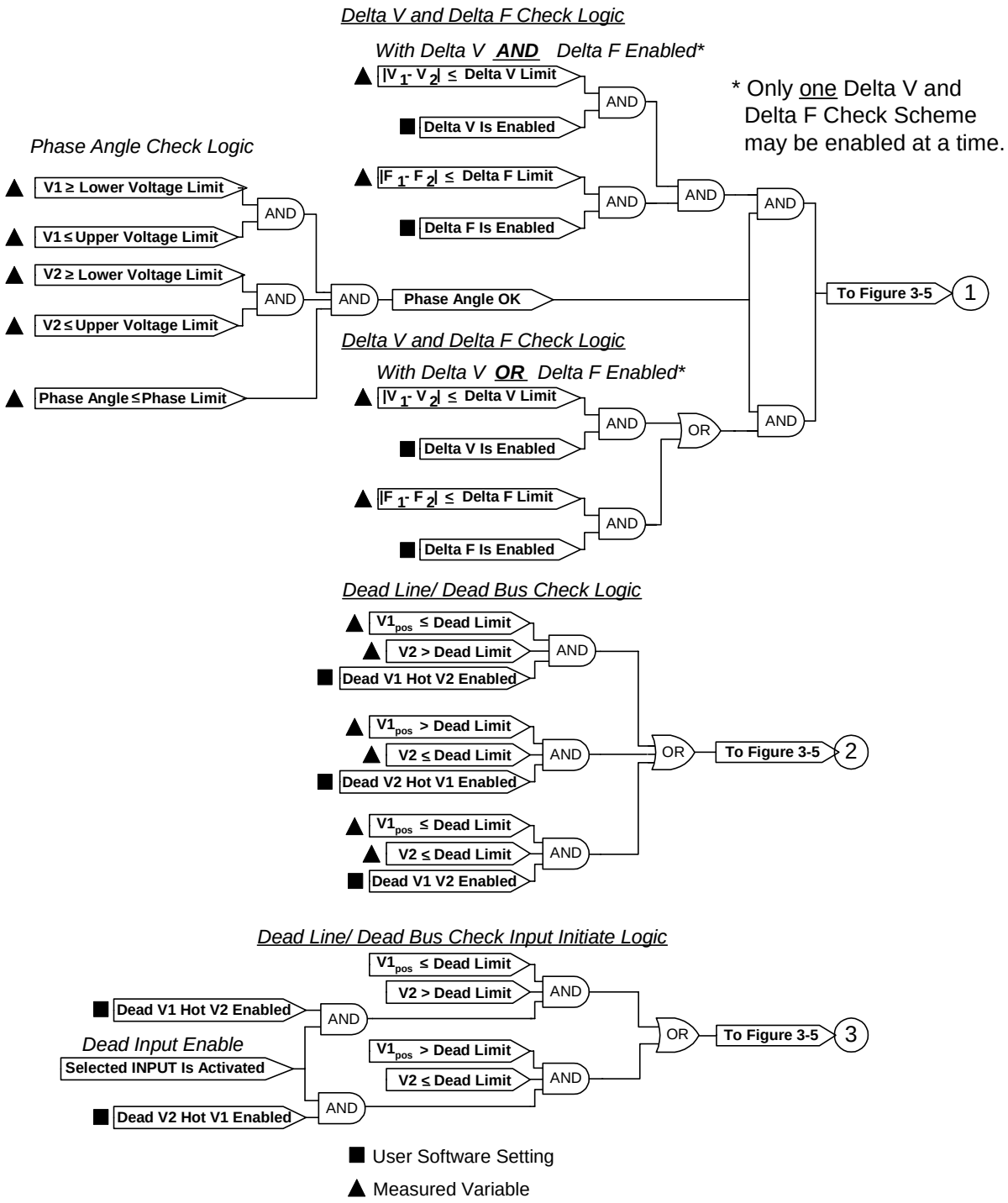

Figure 3-4 25 Function Logic Diagrams

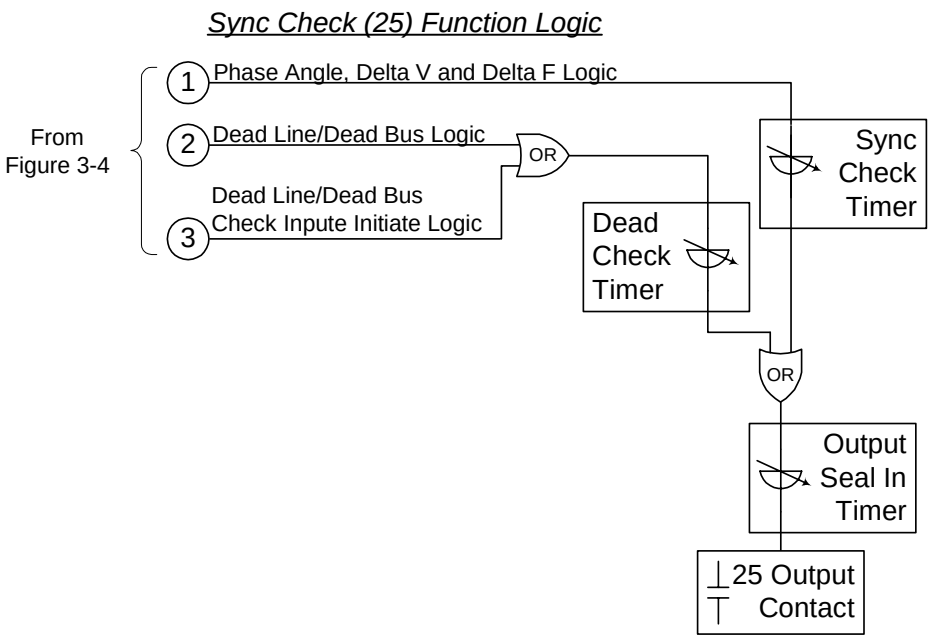

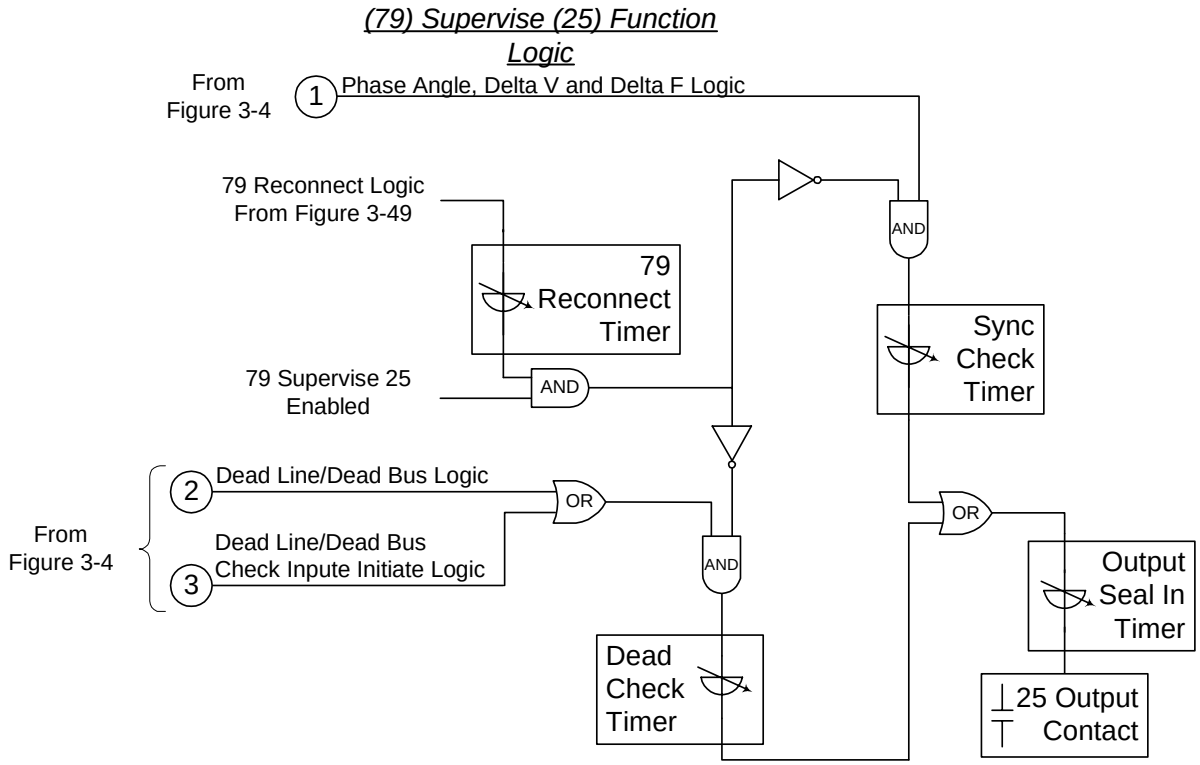

Figure 3-5 Function 25/79 Logic Diagrams

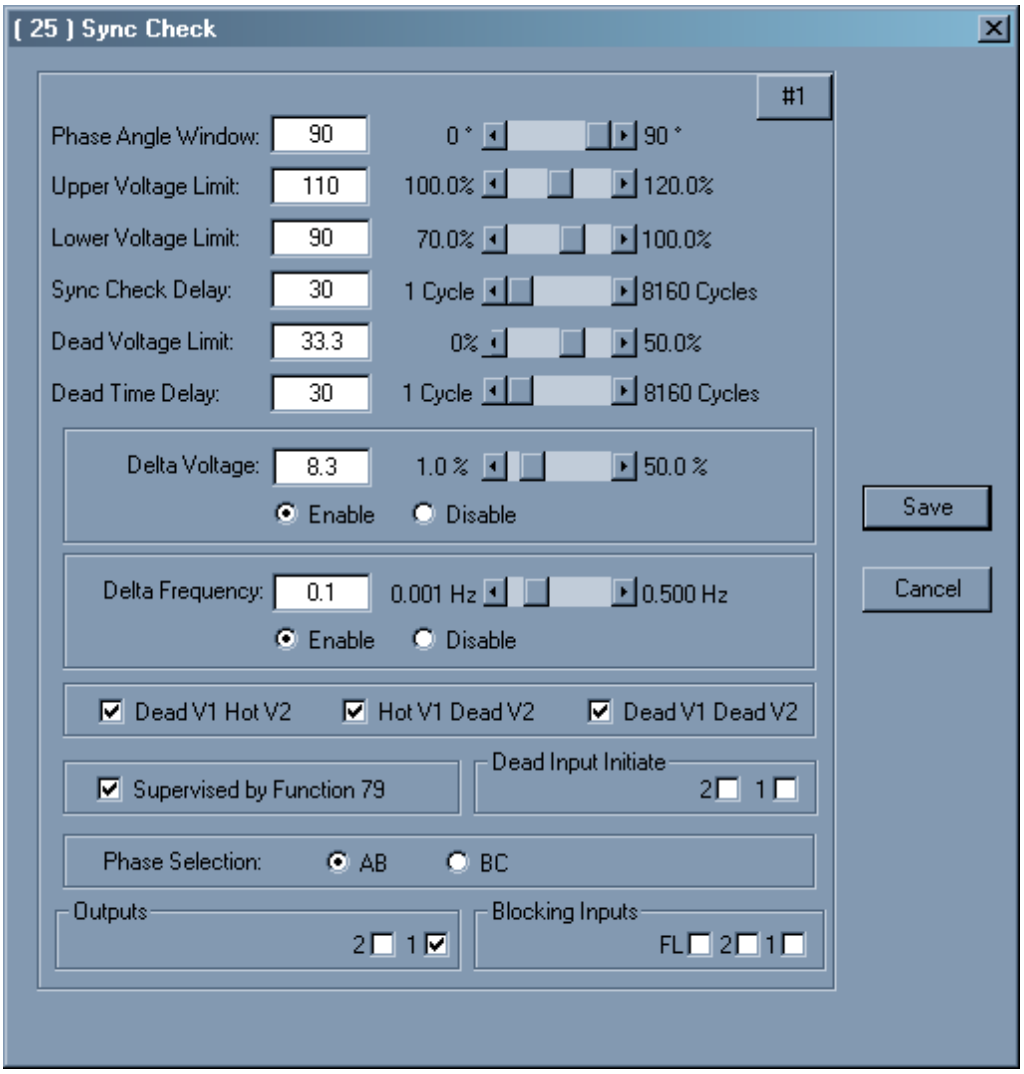

Figure 3-6 M-3810A IPScom® 25 Sync Check Setup Dialog Screen

Path: Relay/Setup/Setpoints/25 Sync Check

COMMANDS

Send Sends all entered information to the control.

Cancel Returns you to the previous window; any changes to displayed information are lost.

27 Phase Undervoltage, 3-Phase

Generator Protection: The Undervoltage function (27) may be used to detect any condition causing long- or short-term undervoltage. This is a true three-phase function in that each phase has an independent timing element.

Magnitude measurement depends on the 59/27 Magnitude Select setting. (See Section 3.1, Relay Configuration, Relay Setup.) When the RMS option is selected, the magnitude calculation is accurate over a wide frequency range (10 to 80 Hz) and an additional time delay of 20 cycles (beyond the set delay) may occur. If DFT is selected, the magnitude calculation is accurate near 50 or 60 Hz, and the timer accuracy is ±2 cycles. RMS selection is recommended for generator protection applications, as RMS calculations are accurate over a wide frequency range.

Intertie Protection: Voltage is commonly suggested as an efficient means to protect against islanding. Notably, unless the Dispersed Generation (DG) includes very high-speed generator excitation response, the island case where load is greater than generation will result in a rapid drop of voltage. Except for those systems prone to ferroresonance, the voltage waveform will remain essentially sinusoidal, making the use of DFT (RMS value of fundamental frequency component) for the measurement. This function is typically set at 90% to 95% of nominal voltage (in accordance with the lower limit allowed for supply to customers), with a 1 second time delay to prevent incorrect operation from a voltage dip caused by an external fault. The 59/27 magnitude select setting of DFT is recommended for intertie protection applications.

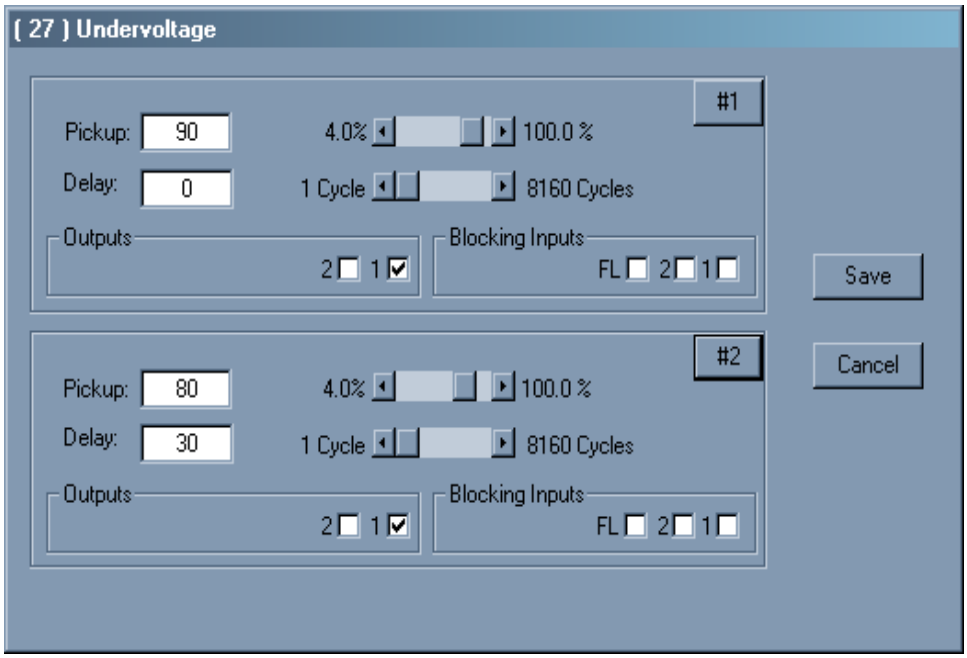

Figure 3-7 M-3810A IPScom® (27) Phase Undervoltage Setup Dialog Screen

Path: Relay/Setup/Setpoints/27 Undervoltage

COMMAND BUTTONS

Save Saves all entered information to the control.

Cancel Returns you to the previous window; any changes to displayed information are lost.

■ **NOTE**: Pickup ranges (4% to 100%) are of Nominal Voltage.

27G/59G Undervoltage/Overvoltage, Ground Circuit or Zero Sequence

The Ground Circuit Under/Overvoltage functions (27G/59G) provide protection for ground faults on systems supplied from an ungrounded source.

Applications of 27G/59G, shown in Figure 3-8 and Figure 3-9 are for detecting ground faults on the ungrounded utility side of the power transformer. Protection schemes are applied based on using one or three voltage transformers (VT).

Ground Fault Detection using a Broken-Delta VT and the 59G Function

The 59G may be used to detect system phase voltage unbalance in conjunction with three VTs. To do so, the VT secondaries are connected “broken” delta; i.e., they are in delta except that one corner is open, and the 59G device is inserted (as illustrated in Figure 3-8).

In this case, voltage at 59G in Figure 3-8 will be zero, as long as the three-phase voltages are balanced, but will rise above zero with any zero-sequence unbalanced condition, as will be expected with any ground fault.

Ground Fault Detection Using One Phase-to-Ground VT and 59G/27G

▲ **CAUTION**: This scheme should be used with caution, since it can result in high overvoltages due to ferroresonance and neutral inversion.

An alternate, but not recommended, scheme uses the 27G and 59G devices with one VT rated for line-to-line voltage, but connected from any one phase to ground as shown in Figure 3-9. This scheme will detect the most common line-to-ground faults on systems supplied by an ungrounded source, in the following manner:

- A fault on the phase that includes the VT will pull that phase voltage low and initiate operation of the 27G element.
- A fault on either phase without the VT will result in line-to-line voltage (or $\sqrt{3}$ x normal line-to-ground voltage) appearing at the VT, intiating operation of the 59G element.

For this scheme to work, the capacitance to ground of the lines must be fairly closely balanced and high enough to keep the neutral of the system at close to ground potential. The shunt resistor helps to minimize the chance of ferroresonance or neutral inversion. (*Applied Protective Relaying*, Westinghouse Electric Corporation, 1982). Typical Shunt Resistor values presented in Table 3-1.

When the relay burden is small, the transformers in this scheme will be subject to ferroresonance and high voltage oscillations unless a shunt resistor is used. The shunt resistor will dampen high transient voltage oscillations, and will usually hold peak values to less than twice normal crest voltage to ground (*Protetive Relaying Principles and Applications, Second Additon, J. Lewis Blackurn*).

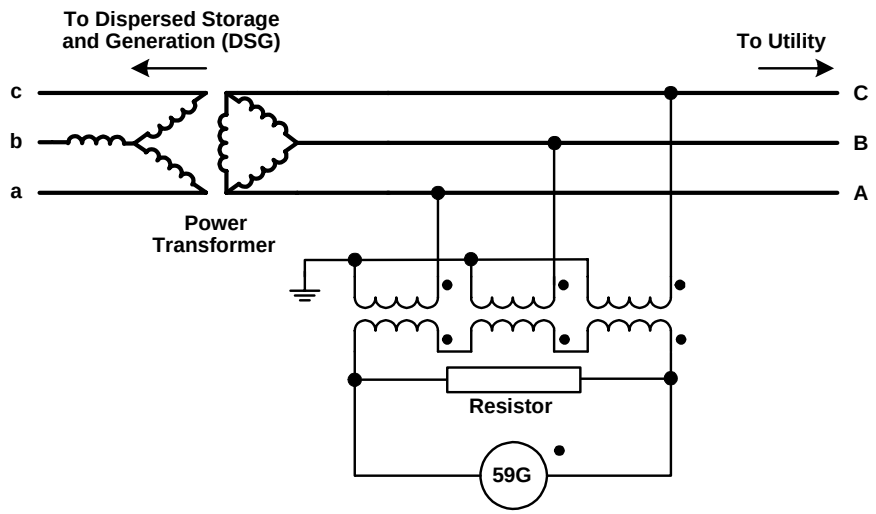

Figure 3-8 Ground Fault Detection Using a Broken-Delta VT and 59G

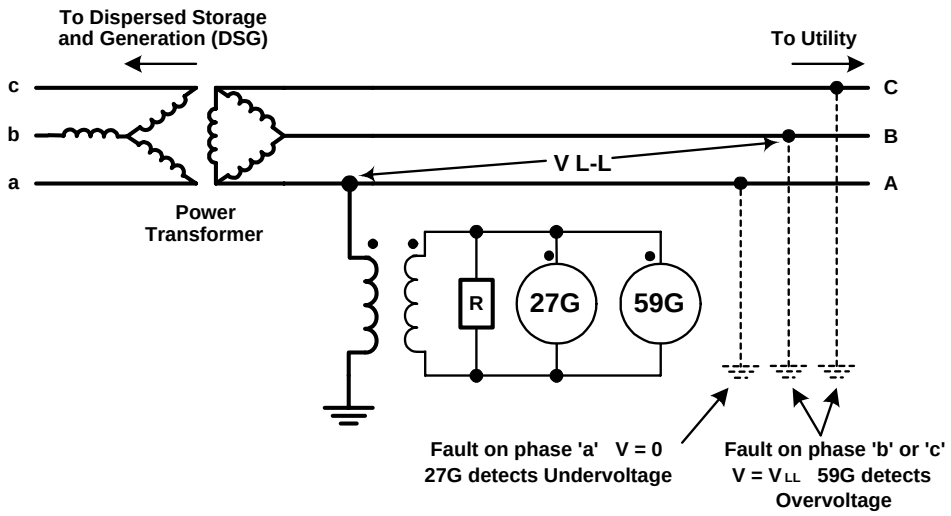

Figure 3-9 Ground Fault Detection Using One Phase-to-Ground VT and 59G/27G

Typical Values		
VT Ratio	R	Watts at 208 V
2400/120	250Ω	175
4200/120	125Ω	350
7200/120	85Ω	510
14400/120	85Ω	510

Table 3-1 Typical Shunt Resistor Values

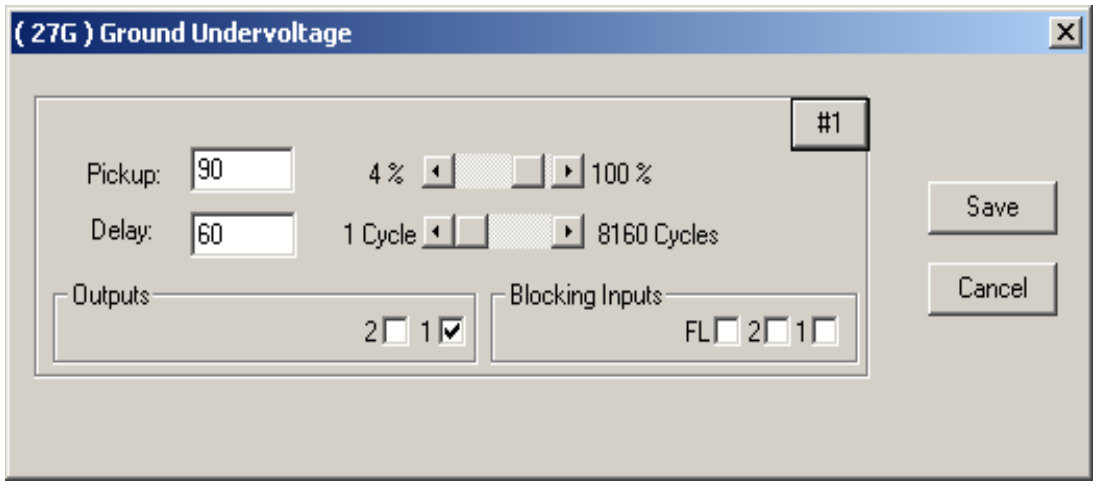

Figure 3-10 M-3810A IPScom® (27G) Ground Undervoltage Setup Dialog Screen

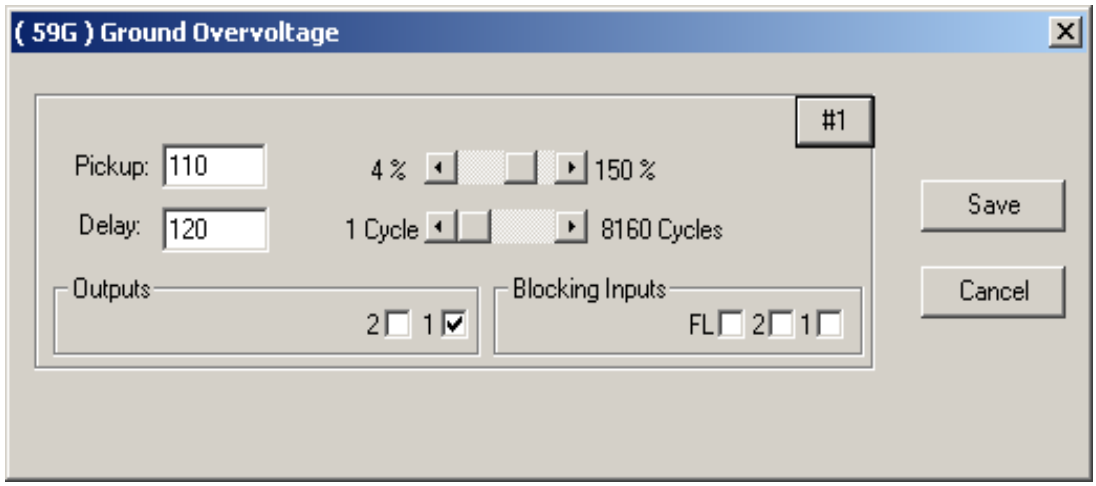

Figure 3-11 M-3810A IPScom (59G) Ground Overvoltage Setup Dialog Screen

Path: Relay/Setup/Setpoints/27G Ground Unvdervoltage or 59G Ground Overvoltage

COMMAND BUTTONS

Save Saves all entered information to the control.

Cancel Returns you to the previous window; any changes to displayed information are lost.

■ **NOTE**: Pickup ranges (%) are of Nominal Voltage.

32 Directional Power, 3-Phase or 1-Phase

Directional Power protection (32) is available in either the Reverse Overpower, Reverse Underpower, Forward Overpower or Forward Underpower configuration presented in Figure 3-12. A power import and export convention that considers Dispersed Generation (DG), Utility and the M-3410A perspectives is also included. The directional power function provides two power elements, each with a direction setting, magnitude setting and time delay, and configurable as an underpower or overpower element.

Generator Protection: The directional power function may provide both generator motoring and overload protection. Forward power is defined as power exported from the generator, and reverse power is defined as power absorbed by the generator (see Figure 2-8 and 2-10).

Two power elements are provided, each with a magnitude setting and time delay. The setting range is from –3.00 PU to 3.00 PU where 1 PU is equal to the generator MVA rating. Normalized PU power flow measurements are based on the Nominal Voltage and Nominal Current setting, as shown in Section 3.1, Relay Configuration, Relay Setup.

Interconnection Protection: Power protection may be useful as a means of fault backfeed protection and loss of utility supply, depending upon the size of the DG, the DG's load, the feeder load, and utility import/export restrictions. Forward power is defined as power exported from a DG to a Utility, and reverse power is defined as power imported by a DG from a Utility (see Figures 2-9 and 2-11).

The Directional Power function includes a three-phase operation that, when selected, uses total three-phase power measurements. When Three-Phase Detect is disabled, the M-3410A detects the power in each phase, and operates if the power in any one phase exceeds the setpoint. Individual single phase power protection is available only with line-to-ground connected VT's.

Two power elements are provided, each with a magnitude setting and time delay. The setting range is from –3.00 PU to 3.00 PU. The choice of the base PU is typically taken from the MVA rating of the interconnection transformer, the DG's aggregate generating capacity or some other value agreed upon by the DG and the Utility. Normalized PU power flow measurements are based on the Nominal Voltage and Nominal Current setting, as shown in Section 3.1, Relay Configuration, Relay Setup.

If the DG is allowed to supply power to the Utility (export), the forward overpower function can be used to limit the amount of power flow into the Utility. In peak shaving applications, where no export of power form DG to the utility should ever occur, the reverse underpower function can be used to ensure that the DG is importing a minimal amount of power from the Utility, therefore providing a supplemental means of loss of parallel operation protection.

Configuration Process

The directional power elements are individually configured as follows:

1. Input the desired pick up value, positive (forward) or negative (reverse).
   a. *Positive pick up value* – Places the pick up point in the forward power area of the element, creating a forward power element.
   b. *Negative pick up value* – Places the pick up point in the reverse power area of the element, creating a reverse power element.
2. Select either Overpower or Underpower application:

   Overpower Mode
   a. *Reverse Overpower* – An increase in reverse power flow that exceeds the pick up value will cause a trip.
   b. *Forward Overpower* – An increase in forward power flow that exceeds the pick up value will cause a trip.

   Underpower Mode
   a. *Reverse Underpower Mode* – A decrease in reverse power flow that is below the pick up value will cause a trip.
   b. *Forward Underpower Mode* – A decrease in forward power flow that is below the pick up value will cause a trip.
3. If configured for line-to-gnd VT connections, select either three-phase or individual single-phase detection.

▲ **CAUTION:** Proper CT polarity is important in defining the direction of power flow. Refer to Figures 2-9 and 2-10 for proper connections.

32 # 1 & #2 Pickup – If the pickup is set positive, the element is a forward power element. If the pickup is set negative, the element is a reverse power element.

32 #1 & #2 Delay – Power relays should be applied with a time delay to prevent mis-operation during power swing, heavy load pick up or heavy load rejection conditions.

32 Underpower – The 32 function must be blocked by breaker position through auxiliary contacts when the breaker is open.

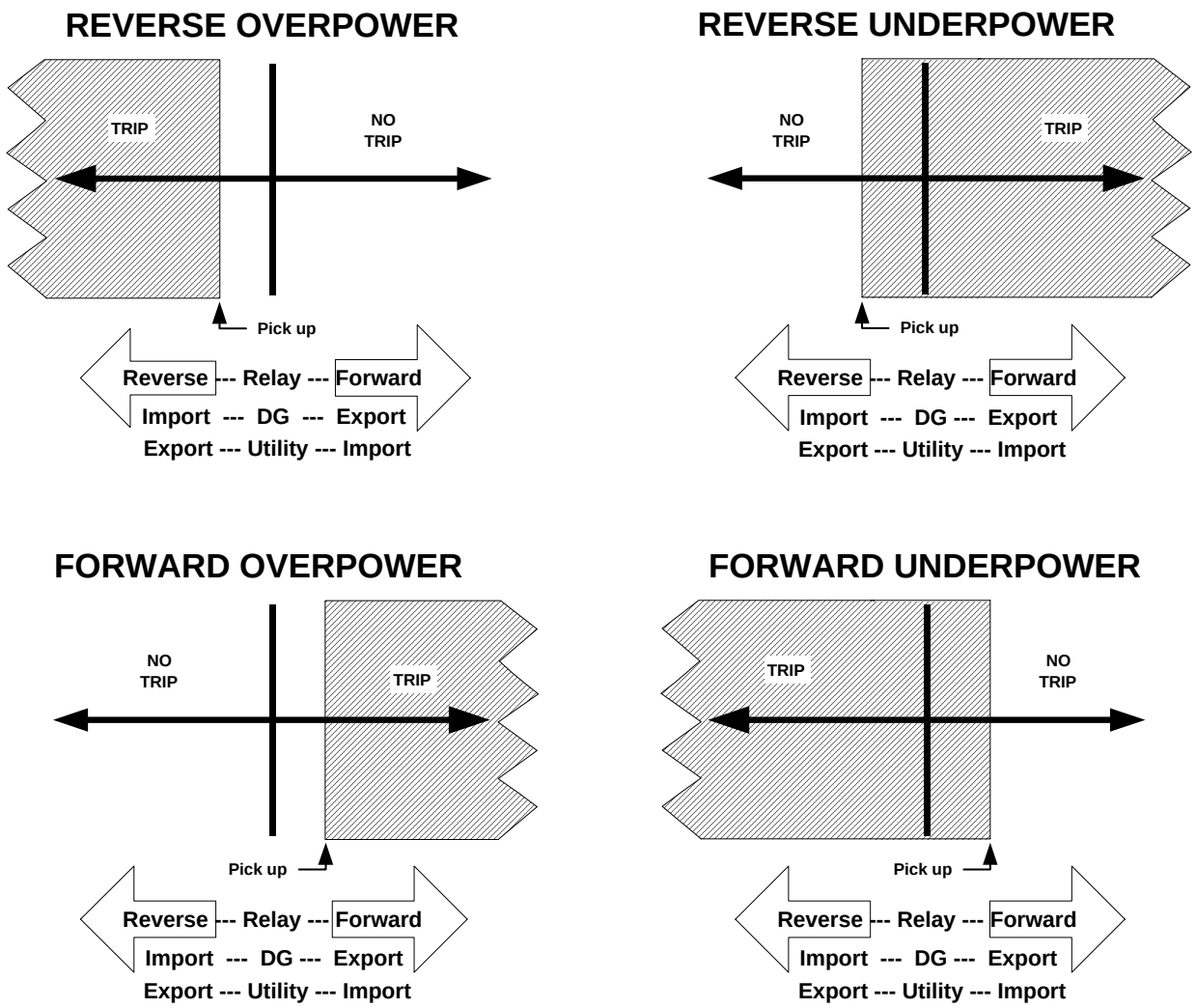

Figure 3-12 Directional Power Configurations

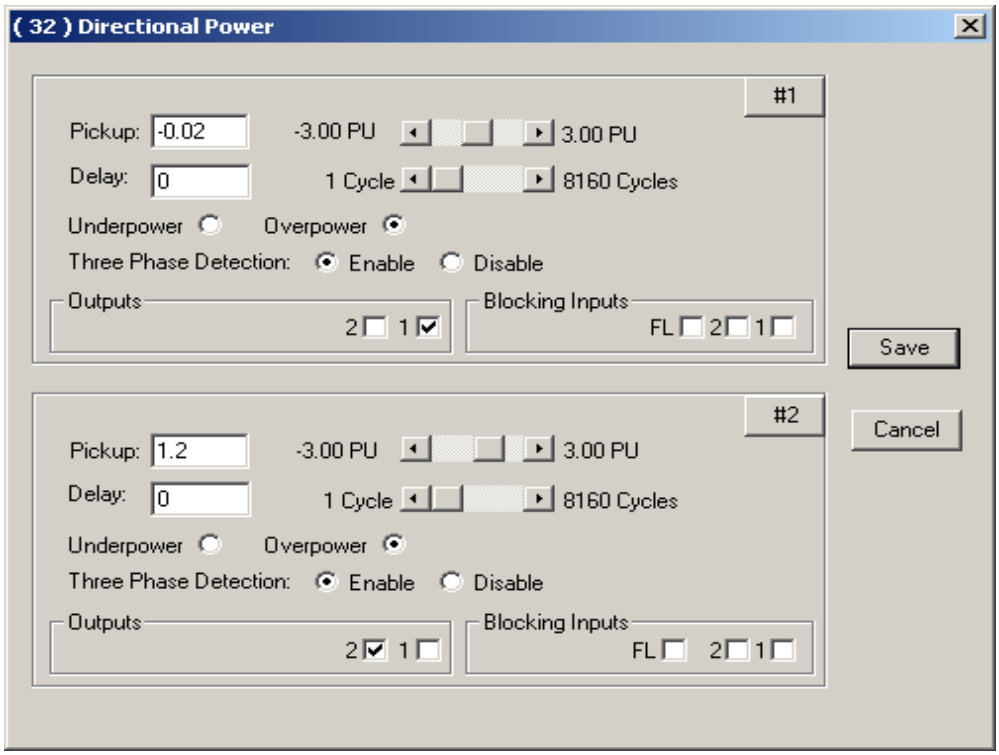

Figure 3-13 M-3810A IPScom® (32) Directional Power Setup Dialog Screen

Path: Relay/Setup/Setpoints/32 Directional Power

COMMAND BUTTONS

Save Saves all entered information to the control.

Cancel Returns you to the previous window; any changes to displayed information are lost.

40 Loss of Field (Generator Protection Only)

The Loss-of-Field function (40) provides protection for a partial or complete loss of field. A variety of possible settings make the M-3410A Intertie/ Generator Protection Relay very flexible when applied to loss-of-field protection.

The loss-of-field function is implemented with two offset mho elements, an undervoltage element, and a directional element. The setting for each mho element, diameter, offset, and time delay, are adjusted individually. Voltage control may be enabled on each element, and the voltage control level setting is common. When voltage control is enabled, the measured positive sequence voltage must be less than the voltage control setting for the loss-of-field function to operate. The common directional unit is provided to block the relay operation during slightly underexcited conditions (since approach #1, Figure 3-14, with negative offset is inherently directional, the directional element is not required). The directional unit's zero sensitivity (torque) line is placed at –13° from the R axis.

The settings of the offset mho elements should be such that the relay detects the loss-of-field condition for any loading while not mis-operating during power swings and fault conditions. Two approaches are widely used in the industry, both of which are supported by the M-3410A relay. Both approaches require knowledge of the reactances and other parameters of the generator. They are illustrated in Figure 3-14, Loss-of-Field (40) – Protective Approach 1, and Figure 3-15, Loss-of-Field (40) – Protective Approach 2.

The impedance can be set in PU quantities. The PU impedance is based on the nominal voltage and nominal current setting.

The first approach is shown in Figure 3-14. Here, both of the offset mho elements (#1 and #2) are set with an offset of $-X'_d/2$, where X'_d is the direct axis transient reactance (saturated) of the generator. The diameter of the smaller circle (#1) is set at 1.0 PU impedance on the machine base. This mho element detects loss-of-field from full load to about 30% load. A small time delay (5–10 cycles) provides fast protection.

The diameter of the larger circle (#2) is set equal to X_d, where X_d is the direct axis synchronous reactance of the machine. This mho element can detect a loss-of-field condition from almost no load to full load. A time delay of 30 to 60 Cycles (#2) should be used in order to prevent possible incorrect operation on stable swings.

The second approach is shown in Figure 3-15. In this approach, one of the mho elements is set with an offset of $-X'_d/2$, a diameter of $1.1\ X_d-(X'_d/2)$, and a time delay of 10 to 30 Cycles. The second element is set to coordinate with the generator minimum excitation limit and steady-state stability limit.

In order to obtain proper coordination, the offset of this element must be adjusted to be positive. Typically, the offset is set equal to the unit transformer reactance (X_T). The diameter is approximately equal to ($1.1\ X_d / X_T$). A time delay of 30 to 60 Cycles would prevent mis-operation on stable swings.

Although the voltage control is common to both zones, either one can be enabled or disabled and is typically set at 80% to 90% of the nominal voltage. The voltage control should be applied after careful study of the system since, depending on the stiffness of the system, the voltage may not be reduced enough to operate the undervoltage element during loss-of-field conditions.

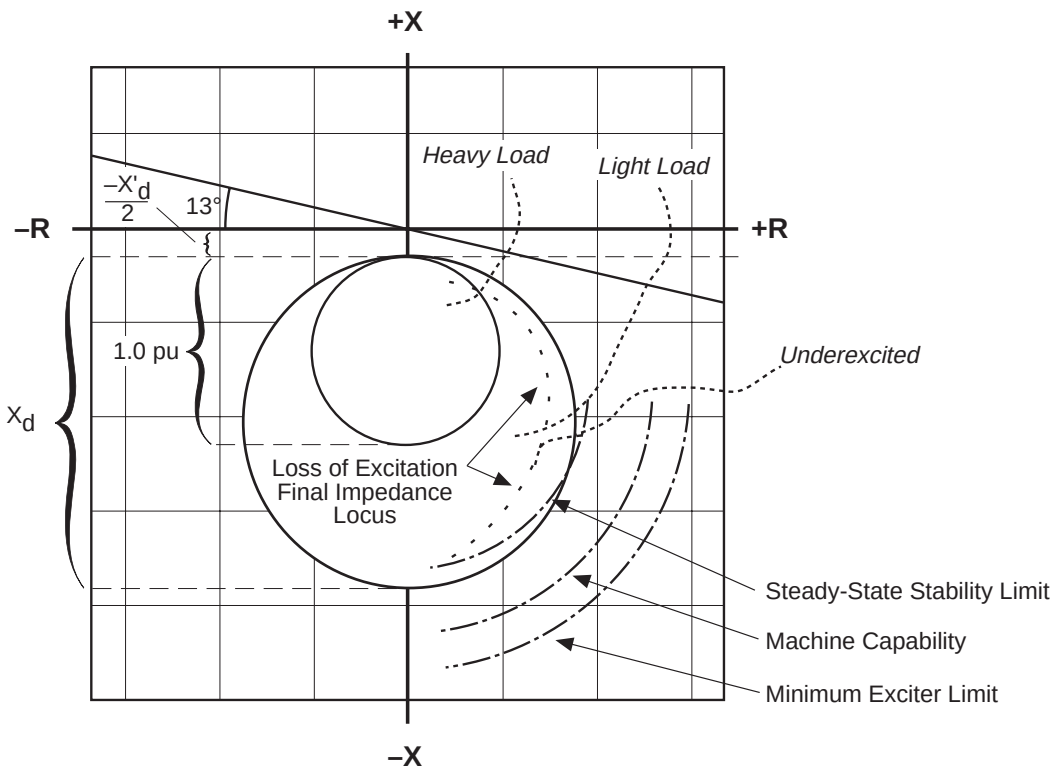

Figure 3-14 Loss-of-Field (40)—Protective Approach 1

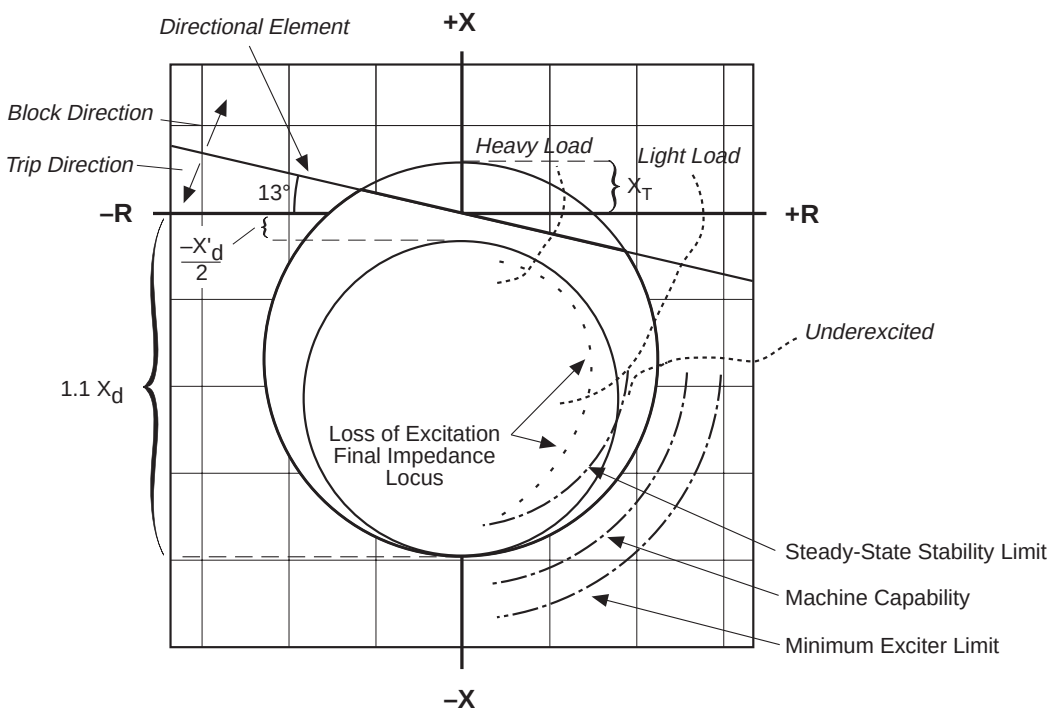

Figure 3-15 Loss-of-Field (40)—Protective Approach 2

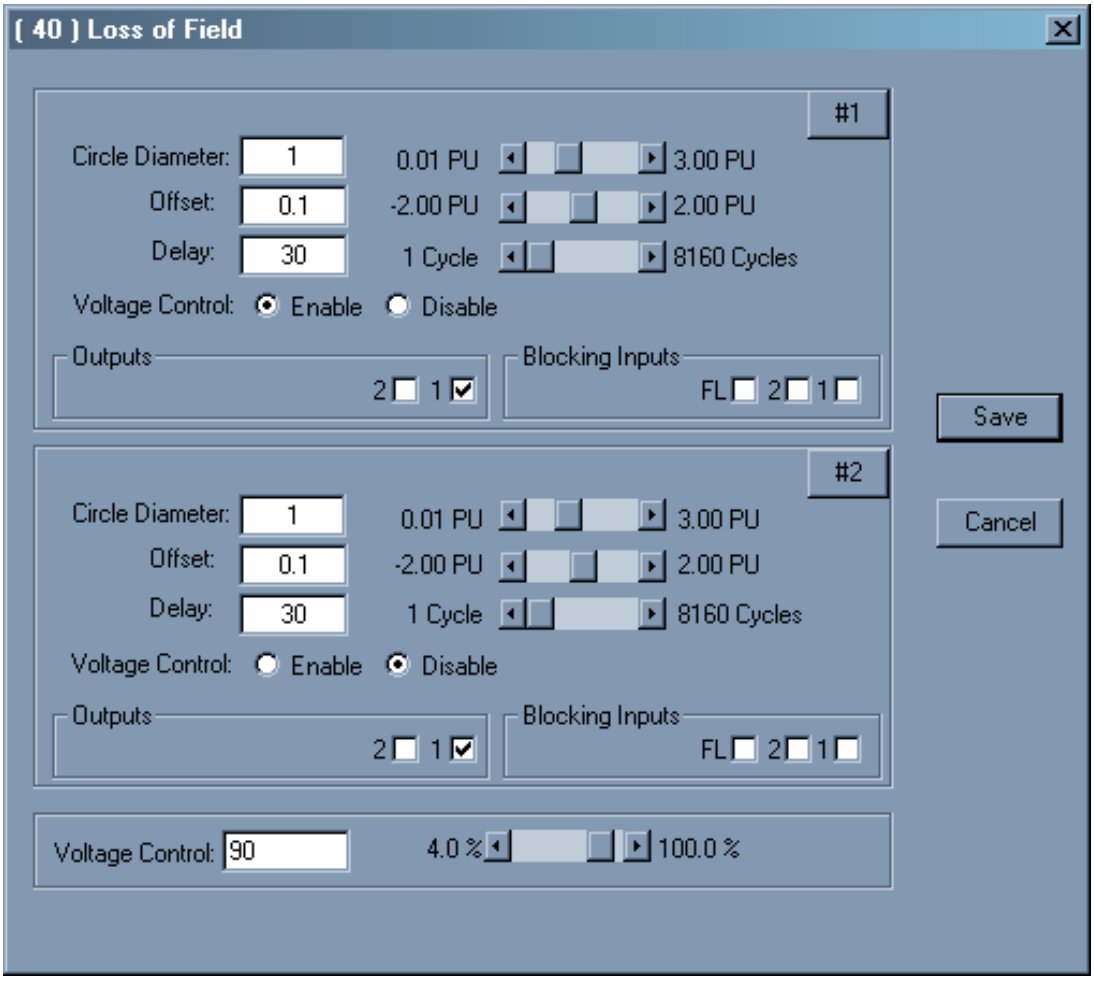

Figure 3-16 M-3810A IPScom® (40) Loss Of Field Setup Dialog Screen

Path: Relay/Setup/Setpoints/40 Loss of Field

COMMAND BUTTONS

Save Saves all entered information to the control.

Cancel Returns you to the previous window; any changes to displayed information are lost.

■ **NOTE**: Voltage Control percentage is based on Nominal Voltage.

46 Negative Sequence Overcurrent (Current Unbalance)

Intertie Protection: The Negative Sequence Overcurrent function (46) provides protection against possible damage due to phase-to-phase and ground faults, as well as unbalanced current conditions from load or open conductors.

This function has a definite time element and an inverse time element. The definite time pickup value and definite operating time are normally associated with an alarm function. The inverse time element is usually associated with a trip function. The inverse time function can be selected as one of the eight curve families: definite, inverse, very inverse, extremely inverse, and four IEC curves. The user selects the pickup and time dial settings.

This protection must not operate for system faults that will be cleared by feeder/line relaying, therefore, proper coordination must be assured. This requires consideration of feeder line protection, bus differential, and breaker failure backup protections.

Generator Protection: The Negative Sequence Overcurrent function provides protection against possible rotor overheating and damage due to unbalanced faults or other system conditions which can cause unbalanced three phase currents in the generator.

This function has a definite time element and an inverse time element. The definite time pickup value and definite operating time are normally associated with an alarm function. The inverse time element is usually associated with a trip function and has a pickup and an operating time defined by an $(I_2)^2 t$ = **K**, where **K** is the Time Dial Setting and I_2 is the per unit negative sequence current.

The minimum delay for the inverse time function is factory set at 12 cycles to avoid nuisance tripping. A maximum time to trip can be set to reduce the operating times for modest unbalance. An important feature that helps protect the generator from damage due to recurring unbalance is a linear reset characteristic. When I_2 decreases below the pickup value, the trip timer takes four minutes to reset from its 100% trip level. Figure D-9, Negative Sequence Overcurrent Inverse Time Curves for Generator Protection, illustrates the inverse time characteristic of the negative sequence overcurrent function.

Operating times are lower than what is shown in Figure D-9, (46) Negative Sequence Overcurrent Inverse Time Curves for Generator Protection, when measured current values are greater than 15 A (3 A for 1 A rated circuit).

The first task of setting this function is to determine the capabilities of the associated machine. As established by ANSI standards, the machine limits are expressed as $(I_2)^2 t$ = **K**. The value of **K** is established by the machine design and is generally provided on test sheets of the machine. The relay can accommodate any generator size because of the wide range of **K** settings from 1 to 95. Typical values can be found in ANSI C50.13-1977.

The negative sequence pickup range is from 3% to 100% of the Nominal Current value input during system setup (see Section 3.1, **Relay Configuration**).

This protection must not operate for system faults that will be cleared by system relaying. This requires consideration of line protection, bus differential and breaker failure backup protections.

46DT PICKUP - The pickup setting is usually quite low (3–5%) and the output of this function is usually connected to alarm only.

46DT DELAY - Time delay should be set high enough to avoid alarms on transients.

46IT PICKUP - The 46 Inverse Time pickup setting should coincide with the continuous negative sequence current capability of the generator operating at full output.

46 IT TIME DIAL - The time dial setting corresponds to the **K** provided by the generator manufacturer for the specific unit being protected. See Appendix D, Figures D-1 to D-9, for the negative sequence and overcurrent inverse time curves.

46IT MAX DELAY - The maximum trip time is used to reduce the longer trip times associated with low to moderate imbalances to a preset time.

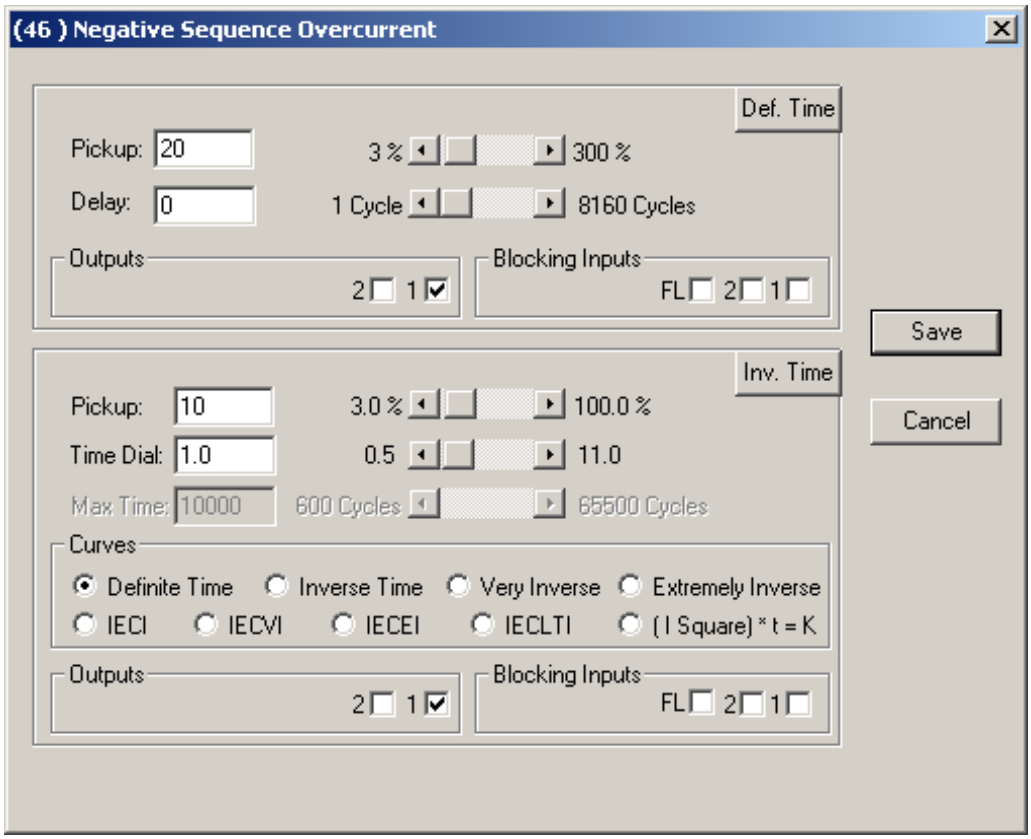

Figure 3-17 M-3810A IPScom® (46) Negative Sequence Overcurrent Setup Dialog Screen

Path: Relay/Setup/Setpoints/46 Negative Sequence Overcurrent

COMMAND BUTTONS

Save Saves all entered information to the control.

Cancel Returns you to the previous window; any changes to displayed information are lost.

■ **NOTE**: Pickup percentage is based on Nominal Current.

47 Negative Sequence Overvoltage (Voltage Unbalance)

The Negative Sequence Overvoltage function (47) provides protection for voltage unbalance and reverse phase sequence.

Voltage unbalance can occur from blown fuses on transformers, open conductors, load unbalance and other single-phase events. Phase reversal may occur when lines are repaired and conductors are inadvertently swapped.

A pickup setting in the range of 8 to 25% can reliably detect open phases and reverse phase sequence.

A minimum time delay of 6 to 10 cycles will prevent mis-operation during switching transients.

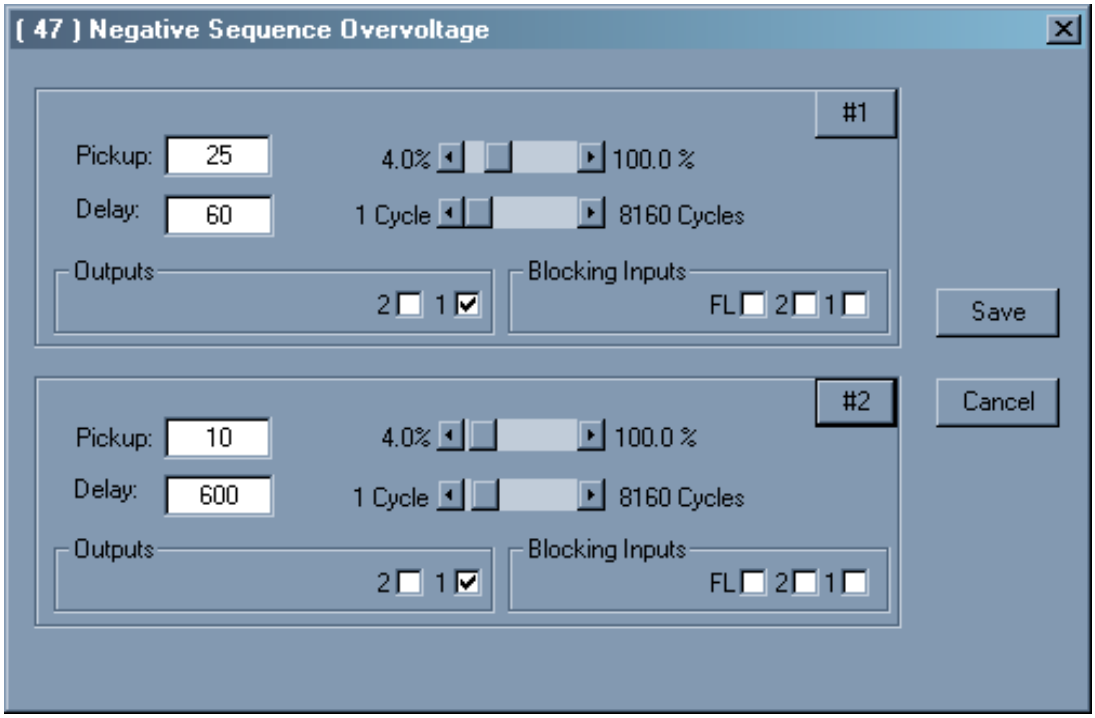

Figure 3-18 M-3810A IPScom® (47) Negative Sequence Overvoltage Setup Dialog Screen

Path: Relay/Setup/Setpoints/47 Negative Sequence Overvoltage

COMMAND BUTTONS

Save Saves all entered information to the control.

Cancel Returns you to the previous window; any changes to displayed information are lost.

■ **NOTE**: Pickup percentage is based on Nominal Voltage.

51N Inverse Time Residual Overcurrent

The Inverse Time Residual Overcurrent ($3I_0$) function (51N) provides protection against ground faults. Since normal residual current is usually much lower than the full load phase current, this function can be set more sensitively than the phase overcurrent protection.

The setting and time delay should be coordinated with system elements to assure desired operation.

The curves available for use are shown in Appendix D, Inverse Time Curves, Figures D-1 through D-8. They cover a range from 1.5 to 20 times pickup. For currents beyond 20 times the pickup setting, the relay operating time will remain the same as the 20 times pickup setting.

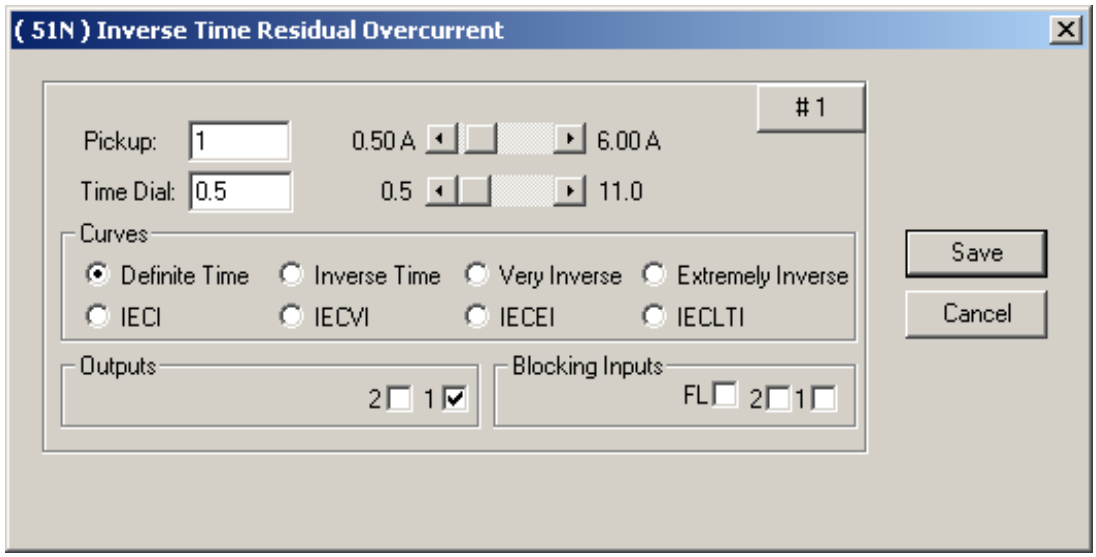

Figure 3-19 M-3810A IPScom® (51N) Inverse Time Residual Overcurrent Setup Dialog Screen

Path: Relay/Setup/Setpoints/51N Inverse Time Residual Overcurrent

COMMAND BUTTONS

Save Saves all entered information to the control.

Cancel Returns you to the previous window; any changes to displayed information are lost.

51V Inverse Time Overcurrent, with Voltage Control or Voltage Restraint

Time overcurrent relays (51) are basic to most distribution and small generation protection schemes. This is the main element used to trip circuits selectively for phase faults and to time coordinate them with other up or downstream devices. For this function, eight complete series of inverse time characteristics are included. The eight curve families to be chosen from are definite, inverse, very inverse, extremely inverse, and four IEC curves. The pickup and time dial settings are selected from the relay menu.

The curves available for use are shown in Appendix D, Figures D-1 through D-8. The relay will start timing when the current is above the pickup value and the relay operating time is shown in Appendix D. These curves cover a range of 1.5 to 20 times Pickup. The range between 1.0 and 1.5 is not shown, as the timing within this range is not very accurate. For currents beyond 20 times the pickup setting, the relay operating time will remain the same as the time for 20 times the pickup setting. The 51V function has voltage control or voltage restraint elements. Under certain conditions, steady-state fault currents on a generator during a three-phase fault can decrease to below the full load current. In order to provide overcurrent protection for those conditions, the voltage control/ restraint element should be enabled. The particular settings will be made by information from short-circuit (fault) studies and knowledge of the coordination requirements with other devices in the system that respond to time overcurrent.

When voltage restraint is selected, the pickup of the 51V is modified continuously according to the voltage inputs, as shown in Figure 3-20. The relay continues to operate independently of current decrement in the machine. The voltage restraint function is well-suited to small generators with relatively short time constants. Voltage restraint is disabled when the relay is shipped from the factory. When the generator is connected to the system through a delta/wye transformer, proper voltages (equivalent to the high-side of the transformer) should be used for the 51V element. The M-3410A can internally determine the equivalent high-side voltages (when supplied by Low (generator) side VT's) of the delta/wye unit transformer, saving auxiliary instrument transformers. The voltage-current pairs used are shown in Table 3-2, Delta/ Wye Transformer Voltage-Current Pairs.

For voltage controlled operation, the function is not active unless the voltage is below the voltage control setpoint, which can be used to help confirm that the overcurrent is due to a system fault. When applied, most users will set voltage control in the range of 0.7 to 0.9 per unit RMS voltage. Voltage control is disabled when the relay is shipped from the factory.

The various features of the 51V Function, such as voltage control, voltage restraint, voltage transformations (for delta-wye unit transformers) can be programmed by the operator.

■ **NOTE**: This function should be blocked by fuse loss if in the voltage control mode. Fuse loss blocking is not required for the restraint mode because the pickup is automatically held at 100% Pickup (see Figure 3-20) during fuse loss conditions, and will continue to operate correctly.

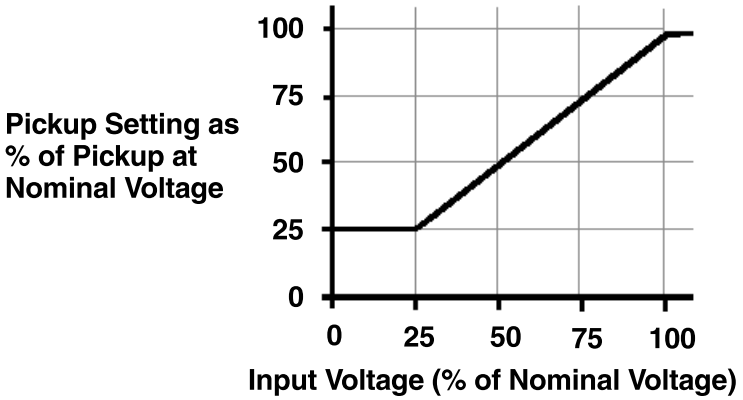

Figure 3-20 Voltage Restraint (51V) Characteristic

Generator Directly Connected			Generator Connected Through Delta/Wye Transformer		
Current	Voltage		Current	Voltage	
	L-G	L-L or L-G to L-L		L-G	L-L or L-G to L-L
I_A	$(V_A-V_C)/\sqrt{3}$	V_{AB}	I_A	V_A	$(V_{AB}-V_{CA})/\sqrt{3}$
I_B	$(V_B-V_A)/\sqrt{3}$	V_{BC}	I_B	V_B	$(V_{BC}-V_{AB})/\sqrt{3}$
I_C	$(V_C-V_B)/\sqrt{3}$	V_{CA}	I_C	V_C	$(V_{CA}-V_{BC})/\sqrt{3}$

Table 3-2 Delta/Wye Transformer Voltage-Current Pairs

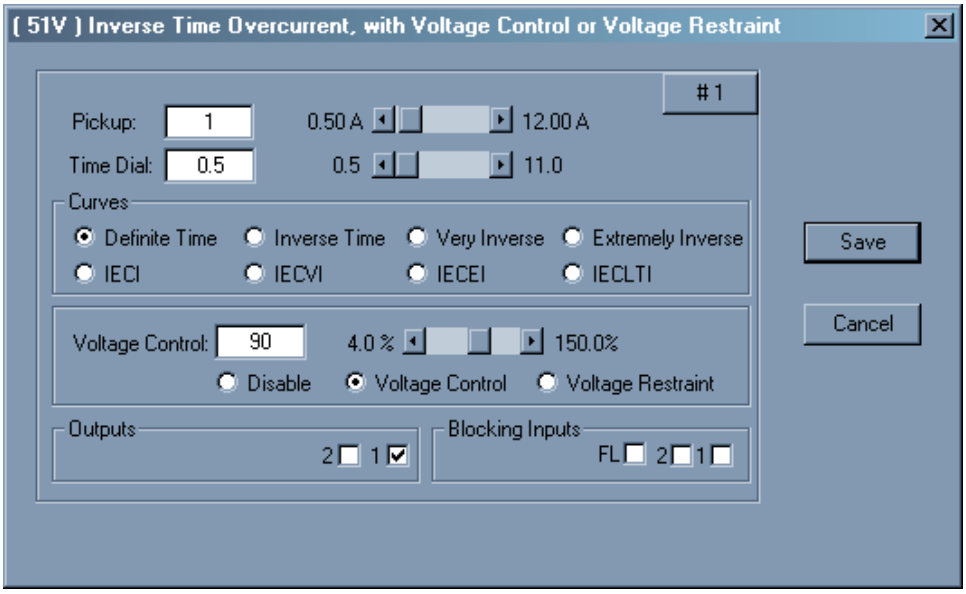

Figure 3-21 M-3810A IPScom® (51V) Inverse Time Overcurrent with Voltage Control or Voltage Restraint Setup Dialog Screen

Path: Relay/Setup/Setpoints/51V Inverse Time Overcurrent with Voltage Control or Voltage Restraint

COMMAND BUTTONS

Save Saves all entered information to the control.

Cancel Returns you to the previous window; any changes to displayed information are lost.

59 Phase Overvoltage, 3-Phase

Generator Protection: The RMS Overvoltage function (59) may be used to provide overvoltage protection for the generator. The relay provides overvoltage protection functions with two voltage levels and two definite-time setpoints, either of which can be programmed to trip the unit or send an alarm. This is a true 3-phase function in that each phase has an independent timing element.

Magnitude measurement depends on the 59/27 Magnitude Select setting (See Section 3.1, Relay Configuration, Relay Setup). When the RMS option is selected, the magnitude calculation is accurate over a wide frequency range (10 to 80 Hz) and an additional time delay of 20 cycles (beyond the set delay) may occur. If DFT is selected, the magnitude calculation is accurate near 50 or 60 Hz, and the timer accuracy is ±2 cycles. RMS selection is recommended for generator protection applications, as RMS calculations are accurate over a wide frequency range. Generator capacity is generally 105% of rated voltage.

Intertie Protection: Voltage is commonly suggested as an efficient means to protect against islanding. Notably, unless the Dispersed Generation (DG) includes very high-speed generator excitation responses, the island case where load is less than generation will result in a rapid rise of voltage. Except for those systems prone to ferroresonance, the voltage waveform will remain essentially sinusoidal, making the use of DFT (RMS value of the fundamental frequency component) for the measurement.

The first setpoint (with a short time delay) is typically set up at 150% of the nominal voltage, and the second setpoint (with a long time delay) be set at 106 to 110% of the nominal voltage to prevent nuisance trips.

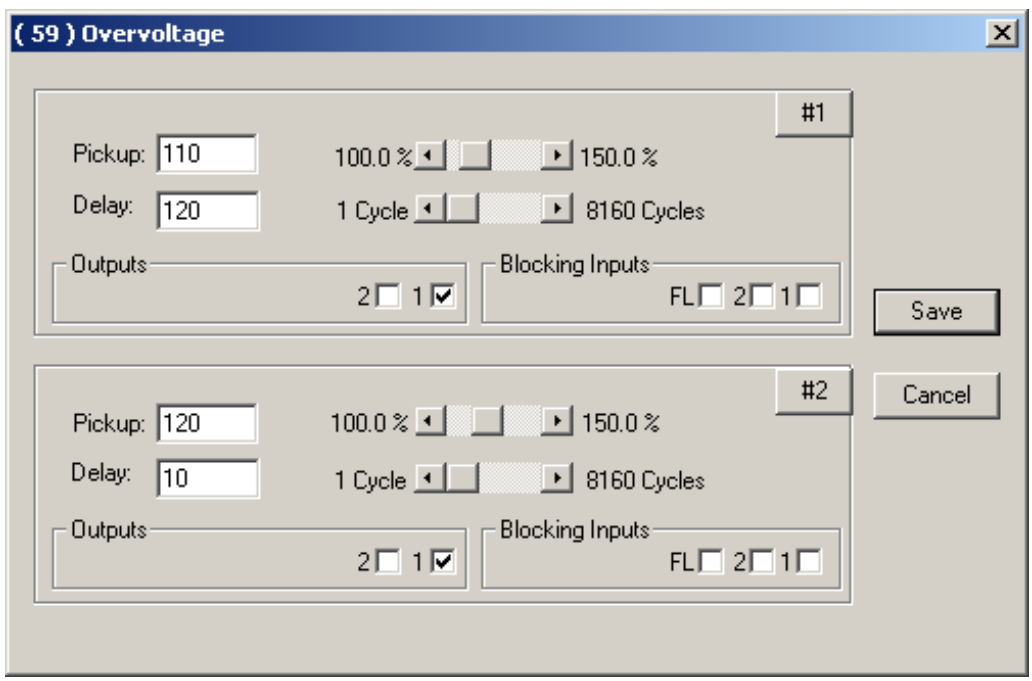

Figure 3-22 M-3810A IPScom® (59) Phase Overvoltage Setup Dialog Screen

Path: Relay/Setup/Setpoints/59 Phase Overvoltage

COMMAND BUTTONS

Save Saves all entered information to the control.

Cancel Returns you to the previous window; any changes to displayed information are lost.

■ **NOTE**: Pickup percentage is based on Nominal Voltage.

59I Peak Overvoltage (Intertie Protection Only)

Most overvoltage relays operate based on the RMS value of voltage. There is, however, a system phenomenon known as ferroresonance which may occur on an islanded system with induction generators and capacitor banks. As the name implies, a system experiencing ferroresonance is in resonance, but the inductance is highly nonlinear, being variable as the transformer core cycles in and out of magnetic saturation. At this time, the voltage waveform will be expected to be very rich in harmonics, to the extent that it is possible that the peak voltage of the nonsinusoidal wave will be dangerously high, even though the RMS value of the same voltage remains in an acceptable range.

Because it is necessary to describe voltage for this purpose in terms of the peak value of voltage (not RMS), it is convenient to define the parameter setpoints in per unit of the peak of the nominal sinusoidal waveform. The per unit value is based on the nominal voltage setting. As an example, for a one PU RMS voltage of 120 V, the one per unit instantaneous peak voltage is 120 x $\sqrt{2}$ = 170 V.

59I PICKUP - Typical pickup setting is between 120 to 140% of the peak value.

59I DELAY - A time delay of 10 cycles provides fast protection and prevents mis-operation during system disturbances.

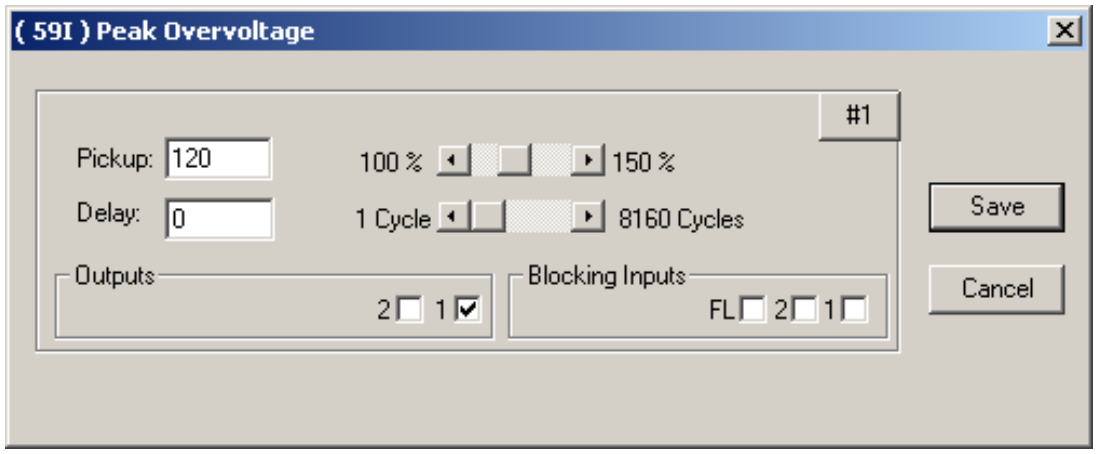

Figure 3-23 M-3810A IPScom® (59I) Peak Overvoltage Setup Voltage Dialog Screen

Path: Relay/Setup/Setpoints/59I Peak Overvoltage

COMMAND BUTTONS

Save Saves all entered information to the control.

Cancel Returns you to the previous window; any changes to displayed information are lost.

■ **NOTE**: Pickup percentage is based on Nominal Voltage. Pickup to be entered as a nominal peak percentage value.

60FL VT Fuse Loss

Since some functions (especially 51V and 40) may inadvertently operate when a VT fuse is blown, provisions are incorporated for both internal and external fuse loss detection.

For internal detection of a fuse-loss condition, positive and negative sequence quantities are compared. The presence of negative sequence voltage in the absence of negative sequence current is considered to be a fuse loss condition. The presence of negative sequence voltage and negative sequence current is considered a fault condition, and not a blown fuse. An additional supervising condition includes a minimum positive sequence voltage to assure VT inputs are being applied to the relay.

For the specific application where the above logic cannot be considered reliable (such as when current inputs to the relay are not connected, sustained positive sequence current during fault conditions is minimal, or negative sequence currents are not present during fault conditions), provision is made for ignoring the fuse-loss internal logic by not selecting “FL” from among the Blocking Inputs. Again, in cases where the internal logic is not considered to be reliable, the FL blocking selection should not be chosen.

The 60FL function can also be initiated using the external status inputs, thus accommodating other fuse loss detection schemes. Any combination (“OR” logic) of control/status input (IN1 or IN2) may be used to initiate operation.

A timer associated with the fuse loss logic is available. This timer is to assure proper coordination or conditions which may appear as a fuse loss, such as secondary VT circuit faults which will be cleared by local low voltage circuit action.

■ **NOTE**: The 60FL function need not be enabled in order to use FL as blocking inputs.

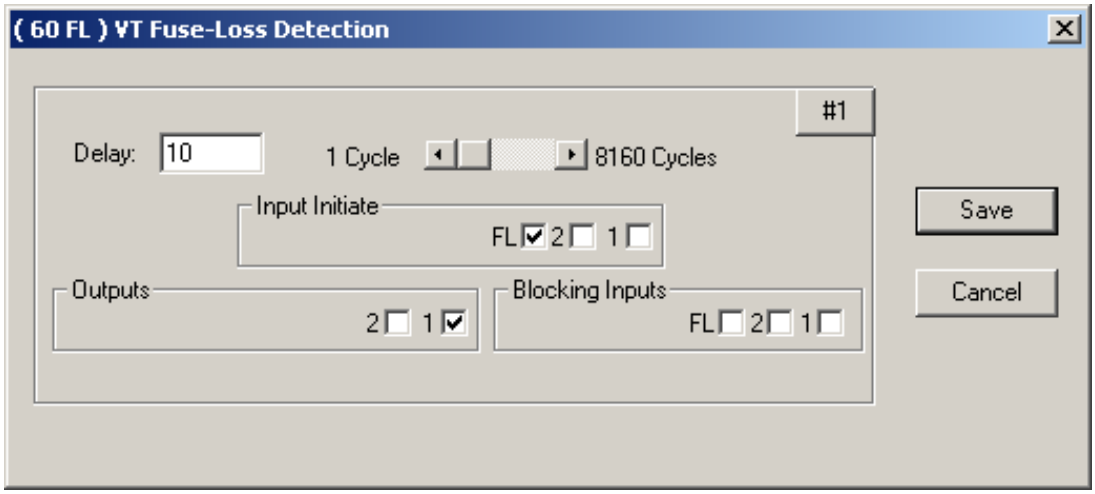

Figure 3-24 M-3810A IPScom® (60FL) Fuse Loss Setup Dialog Screen

Path: Relay/Setup/Setpoints/60FL Fuse Loss

COMMAND BUTTONS

Save Saves all entered information to the control.

Cancel Returns you to the previous window; any changes to displayed information are lost.

79 Reconnect Enable Time Delay

The reconnect function is a permissive programmable output that may be set to close from 2 to 65,500 cycles after all tripping functions are within normal (non-trip) limits. The 79 Function is unique in that it is not considered a tripping function, and therefore does not trigger event storage by default. The 79 Function is enabled, and its output selected through the relay setpoints screen, just as other functions. In addition to the time delay setting, the reconnect function requires the user to designate which outputs are defined as trip outputs. The reconnect relay will initiate timing when all outputs defined as trip outputs release.

For example: If one or more tripping functions are programmed to output 1 (for trip) and 79 to output 2 (for reconnect), then OUT1 should be selected as trip output for the reconnect initiate. The logic representation of this example is shown below.

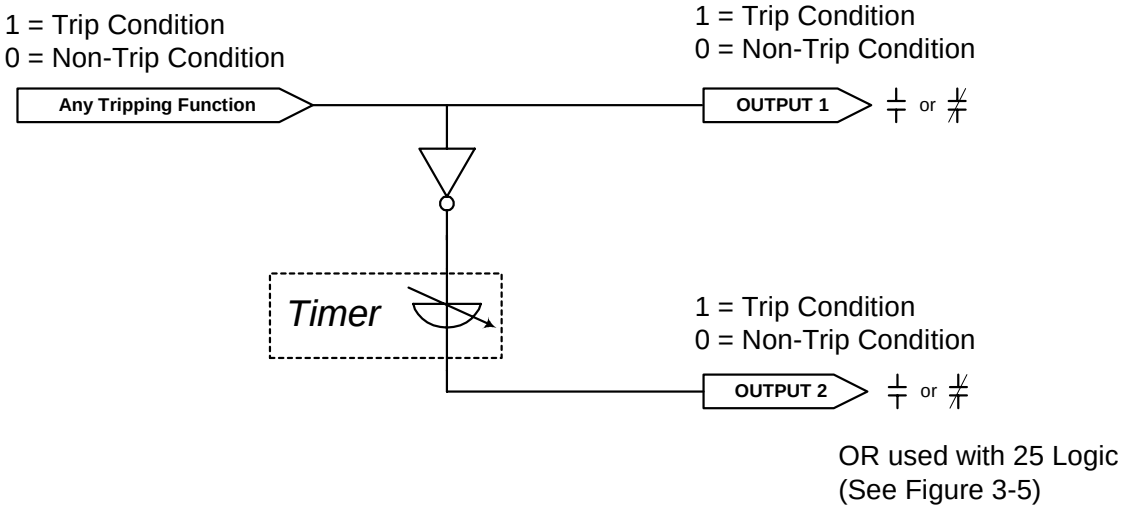

Figure 3-25 79 Reconnect Logic

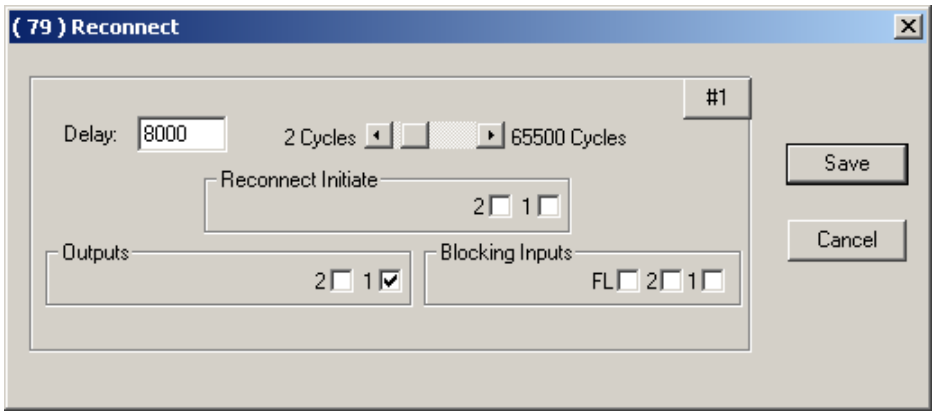

Figure 3-26 M-3810A IPScom® (79) Reconnect Enable Time Delay Setup Dialog Screen

Path: Relay/Setup/Setpoints/79 Reconnect

COMMAND BUTTONS

Save Saves all entered information to the control.

Cancel Returns you to the previous window; any changes to displayed information are lost.

81 Over/Under Frequency

Generator Protection: The Over/Under Frequency function (81) provides overfrequency or underfrequency protection of the generator. It has four independent pickup and time delay settings. The overfrequency mode is automatically selected when the frequency setpoint is programmed higher than the nominal frequency (50 or 60 Hz), and the underfrequency mode selected when the setpoint is programmed below the nominal frequency.

The prime mover is usually considered to be more restrictive than the generator at reduced frequencies because of possible natural mechanical resonance in the many stages of the turbine blades. If the generator speed is close to the natural frequency of any of the blades, there will be an increase in vibration. Cumulative damage due to this vibration can lead to cracking of the blade structure.

Sample settings of the 81 Function are shown in Figure 3-27, Example of Over/Under Frequency (81) Trip Characteristics. The frequency functions are automatically disabled when the input voltage (positive sequence) is less than about 5 V.

These magnitude and time settings describe a curve (as shown in Figure 3-27) which is to be coordinated with the capability curves of the turbine and generator as well as the system underfrequency load-shedding program. These capabilities are given by a description of areas of prohibited operation, restricted time operation, and continuous allowable operation.

The underfrequency function is usually connected to trip the machine whereas the overfrequency function is generally connected to an alarm.

In order to prevent mis-operation during switching transients, the time delay should be set to greater than five cycles.

Intertie Protection: When Dispersed Generation (DG) is suddenly islanded, the frequency will quickly shift from 60.0 Hz (except for the improbable case of an exact generation and load match), making the measurement of frequency an excellent means to detect the island condition. If the only purpose is to detect the island condition, the frequency relay 81U and 81O can be set to operate at 59.5 Hz and 60.5 Hz, respectively (on a 60 Hz system), with a delay of about 10 cycles.

A second school of thought advocates that the DG should definitely not be severed from the utility at the slow side while the frequency remains as high as 59.5 Hz. This concept follows from the premise that if the drop in frequency is due to a major loss of system generation, it is at just this time that all available DG should be kept on-line to help prevent a complete system collapse. If this is the objective, it may be useful to set one underfrequency characteristic at 57.5 to 58.0 Hz with a very short time delay, but allowing a higher frequency, say 59.0 Hz, to be maintained for several seconds.

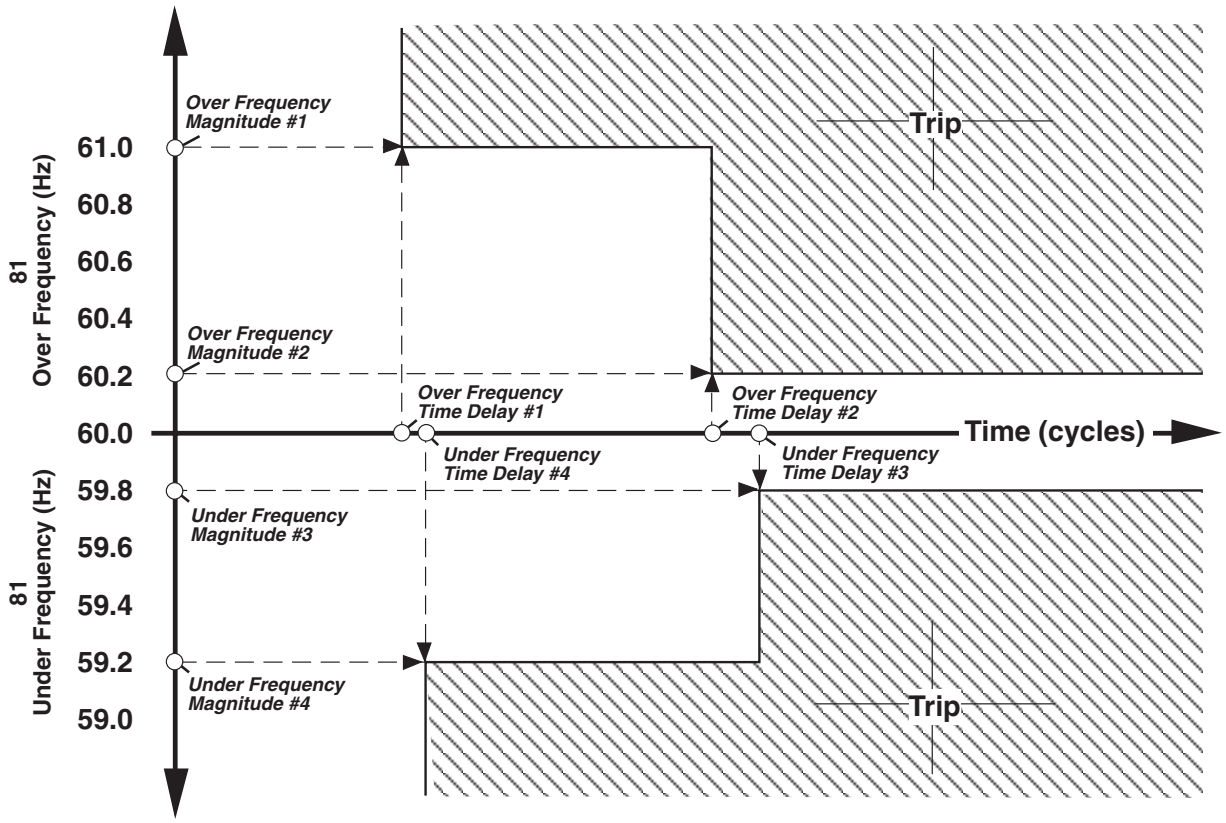

Figure 3-27 Example of Over/Under Frequency (81) Trip Characteristics

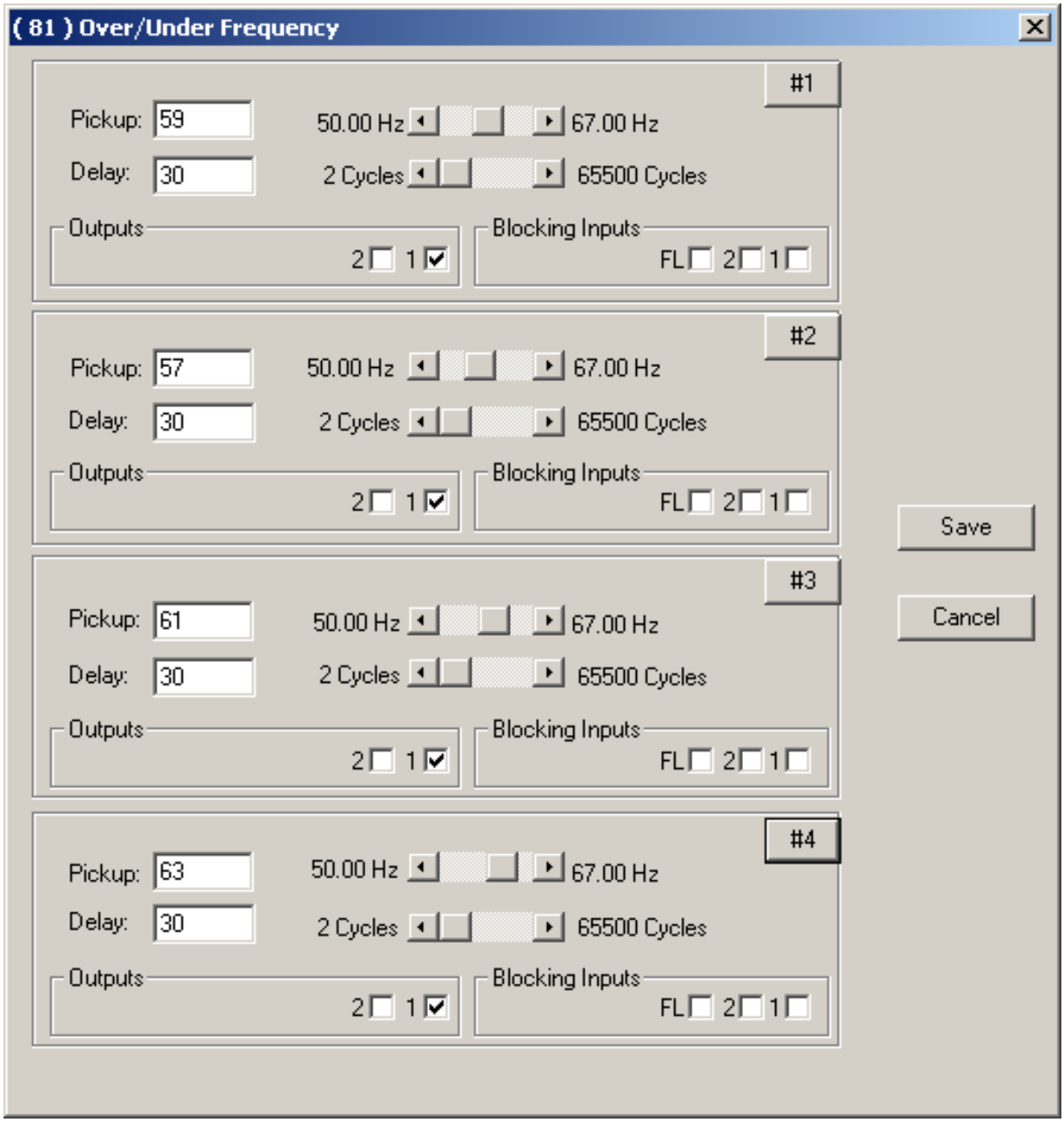

Figure 3-28 M-3810A IPScom® (81) Over/Under Frequency Setup Dialog Screen

Path: Relay/Setup/Setpoints/81 Over/Under Frequency

COMMAND BUTTONS

Save Saves all entered information to the control.

Cancel Returns you to the previous window; any changes to displayed information are lost.

■ **NOTE**: Pickup range for 50 Hz Nominal Frequency models is 40 Hz to 57 Hz.

This Page Left Intentionally Blank

4 Operation and Interface

4.1 General Information 4–1

4.2 Activating Communications 4–2

4.3 M-3810A IPScom® Functional Description 4–3

4.4 Cautions 4–20

4.5 M-3410A Battery Replacement 4–20

This chapter is designed for the person or group responsible for both the local and remote operation and setting of the relay using M-3810A IPScom Communications Software. This chapter also addresses unit battery replacement, and conversion of oscillograph files to COMTRADE format.

4.1 General Information

The M-3410A Intertie/Generator Protection Relay provides two serial communication ports. Serial communication port COM1 is a standard 9-pin, RS-232, DTE-configured port. The front-panel port, COM1, can be used to locally set and interrogate the relay using a temporary connection to a PC or laptop computer.

The second serial communication port, COM2, is located at the rear of the unit. COM2 can be configured as a standard, 9-pin RS-232, DTE port, or as a 4-wire RS-485 port (see Chapter 2, **Installation**, for port configuration). Either port COM1 or COM2 may be used to remotely set and interrogate the relay using a modem or other direct serial connection.

Equipment such as RTU's, data concentrators, modems, or computers can be interfaced for direct, on-line, real time data acquisition and control.

Communication Protocol

MODBUS communication protocol is implemented in the relay. Only the RTU mode of the MODBUS protocol is supported. The following functions are implemented in IPScom using MODBUS protocol:

- Real-time monitoring of measured parameters
- Interrogation and modification of setpoints
- Downloading of recorded oscillographic data and sequence of events data
- Reconfiguration of all relay functions

Direct Connection

In order for IPScom to communicate with the relay using direct serial connection, a serial "null modem" cable is required, with a 9-pin connector (DB9P) for the system, and an applicable connector for the computer (usually DB9S or DB25S). Pin-outs for a null modem adapter are provided in Appendix B, **Communications**.

An optional 10 foot null modem cable (M-0423) is available from the factory, for direct connection between a PC and the relay's front panel COM1 port, or the rear COM2 port.

When fabricating communication cables, every effort should be made to keep cabling as short as possible. Low capacitance cable is recommended. The RS-232 standard specifies a maximum cable length of 50 feet for RS-232 connections. If over 50 feet of cable length is required, other technologies should be investigated, such as RS-485 or fiber optics.

4.2 Activating Communications

After the relay has been set up, the modems initialized, and IPScom® installed, communication is activated as follows:

M-3810A IPScom

1. Select the IPScom icon from the Becoware folder.
2. The IPScom splash screen is displayed briefly, providing the software version number and copyright information. This information is also available by choosing the **About**... command from the **Help** menu.
3. Choose the **Comm** menu selection. Complete the appropriate information in the window for the relay to be addressed.
   a. If communication is through a modem, choose the **Modem** command to expand the communications dialog box. Choose the desired relay location, then select **Dial**. This action establishes contact and automatically opens communication to the relay.
   b. If the computer is directly connected to the relay through either COM1 or COM2, select **Open COM**. This action establishes communications.
4. Enter any valid IPScom command(s) as desired.
5. To end communication when communicating by modem, choose the **Hang Up** command from the expanded Communication dialog box. To close the communication channel when connected locally, choose the **Close COM** command.

4.3 M-3810A IPScom® Functional Description

Overview

When IPScom is run, a menu and status bar is displayed, as shown in Figure 4-1, IPScom Menu Selections. This section describes each IPScom menu selection and explains each IPScom command in the same order as they are displayed in the software program.

When starting IPScom, the initial menu choices are the **File** menu or the **Comm** menu. The choice specifies whether the operator desires to write to a data file or to communicate directly with the relay.

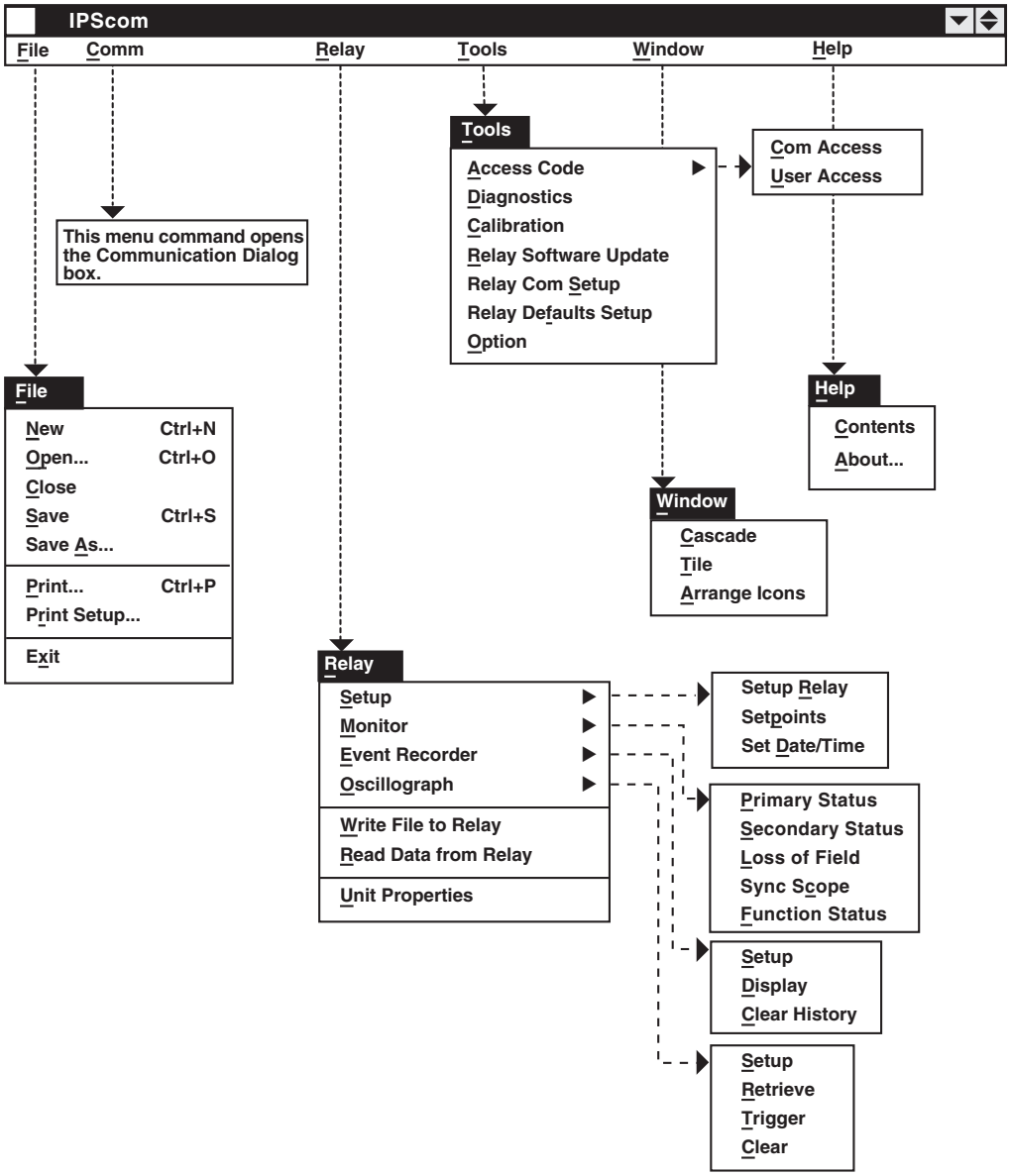

Figure 4-1 M-3810A IPScom Menu Selections

File Menu

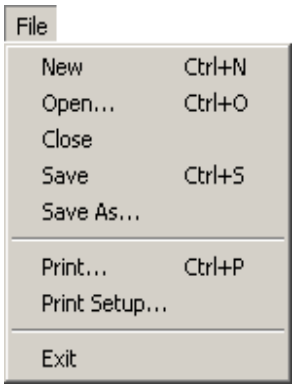

The **File** menu enables the user to create a new data file, open a previously created data file, close, print, and save the file. The IPScom® program can also be exited through the **File** menu.

When not connected to one of the protection systems, using the **New** command, a new file is established with the New Device Profile dialog box (see Figure 4-2, below). Choosing the **Save** command allows the new data file to be named by using the **Save** or **Save As**...commands.

■ **NOTE**: By choosing the **NEW** command, unit and setpoint configuration values are based on factory settings specified for the profiled protection system.

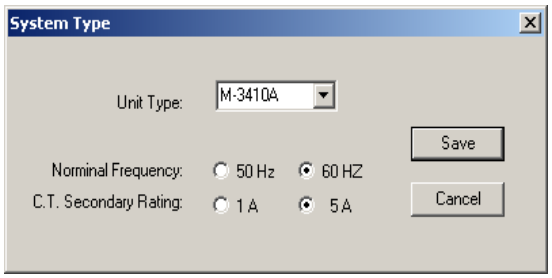

Figure 4-2 M-3810A IPScom New Device Profile Dialog Box

Path: File menu / New command

COMMAND BUTTONS

Save Saves the currently displayed information.

Cancel Returns you to the IPScom main window; any changes to the displayed information are lost.

The **Save** and **Save As**... commands allow re-saving a file or renaming a file, respectively. The **Open** command allows opening a previously created data file. With an opened data file, use the **Relay... Setup...** menu items to access the setpoint windows.

If communication can be established with a relay, it is always safer to use the **Read Data From Relay** command to update the PC's data file with the relay data. This file now contains the proper system type information, eliminating the need to set the information manually.

The **Print** and **Print Setup** commands allow the user to select printer options and print out all setpoint data from the data file or directly from the relay if a relay is communicating with the PC.

The **Exit** command quits the IPScom program.

Comm Menu

The Communication dialog box (see Figure 4-3) allows setup of the IPScom communication data to coordinate with the relay and by choosing **Modem**, to establish contact for remote locations. When communicating by way of a fiber optic loop network, echo cancelling is available by checking the Echo Cancel box. This command masks the sender's returned echo.

If communication is established through the modem, **Initialize** should be selected. If communication cannot be established with the default string, the AT &F may be selected to initialize. Following initialization, select an entry from the modem list and select **Dial** to dial out.

If the modem was not used to establish communication (direct connection), select **Open COM** to start. If the relay has a default communication access code of 9999, a message window will appear showing access level #3 was granted. Otherwise, another dialog box will appear to prompt the user to enter the access code in order to establish the communication. **Close COM** discontinues communication.

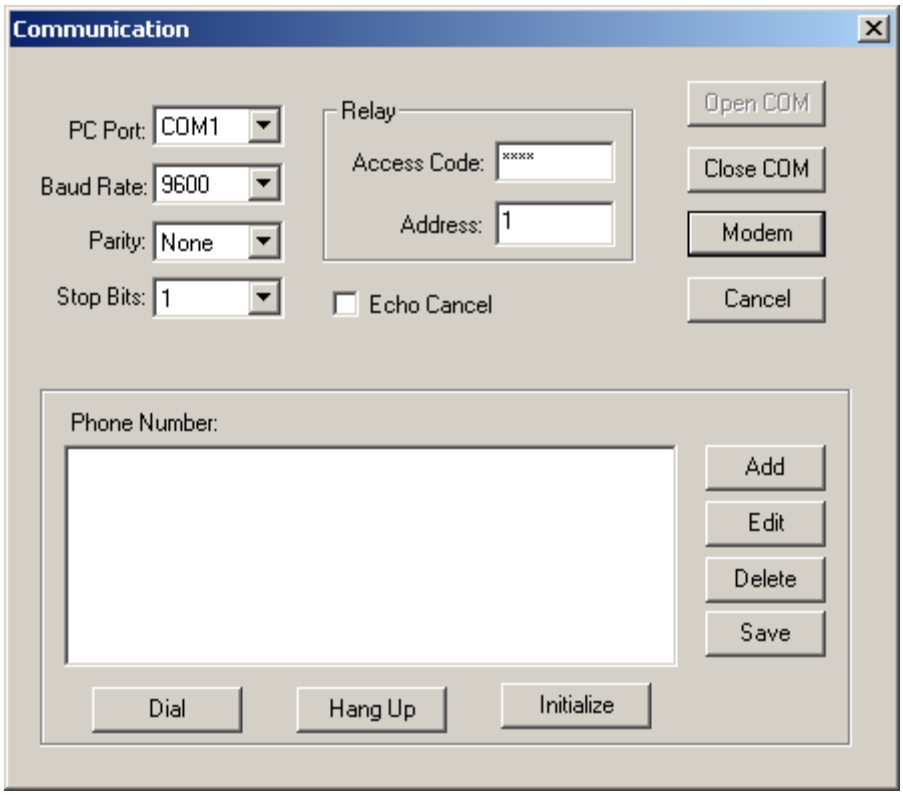

Figure 4-3 M-3810A IPScom® Communication Dialog Box

Path: Comm menu

COMMAND BUTTONS

Open COM Initiates contact with the protective system, by direct serial communication.

Close COM Breaks communication with the protective system, for both direct serial or modem communication.

Modem Displays the expanded Communication dialog box.

Cancel Returns you to the IPScom main window; any changes to the displayed information are lost.

Add Displays the Add/Edit dialog box, allowing you to type a protective system's unit identifier, phone number, and communication address.

Edit Displays the Add/Edit dialog box, allowing you to review and change the user lines (unit identifier), phone number, and communication address of a selected entry.

Delete Deletes a selected entry.

Save Saves telephone numbers

Dial Dials the entry selected from the directory and establishes modem communications.

Hang Up Ends modem communication, allowing you to dial again.

Initialize Allows you to send special setup or other AT commands directly to the modem.

Relay Menu

The **Relay** menu provides access to the windows used to set, monitor, or interrogate the relay. Four submenus are provided: **Setup, Monitor, Event Recorder** and **Oscillograph,** as well as three commands, **Write File to Relay**, **Read Data From Relay,** and **Unit Properties**.

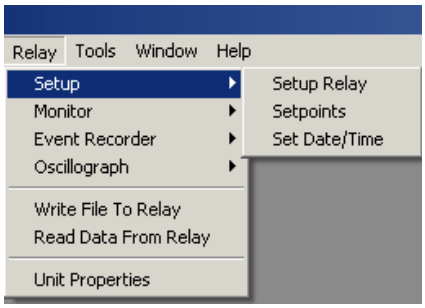

The **Setup** submenu provides three commands: **Setup Relay**, **Setpoints**, and **Set Date/Time**. The **Setup Relay** command displays the Setup Relay dialog box, allowing the input of the pertinent information regarding the system on which the protective relay is applied (see Section 3.1, **Relay Configuration**, Relay System Setup).

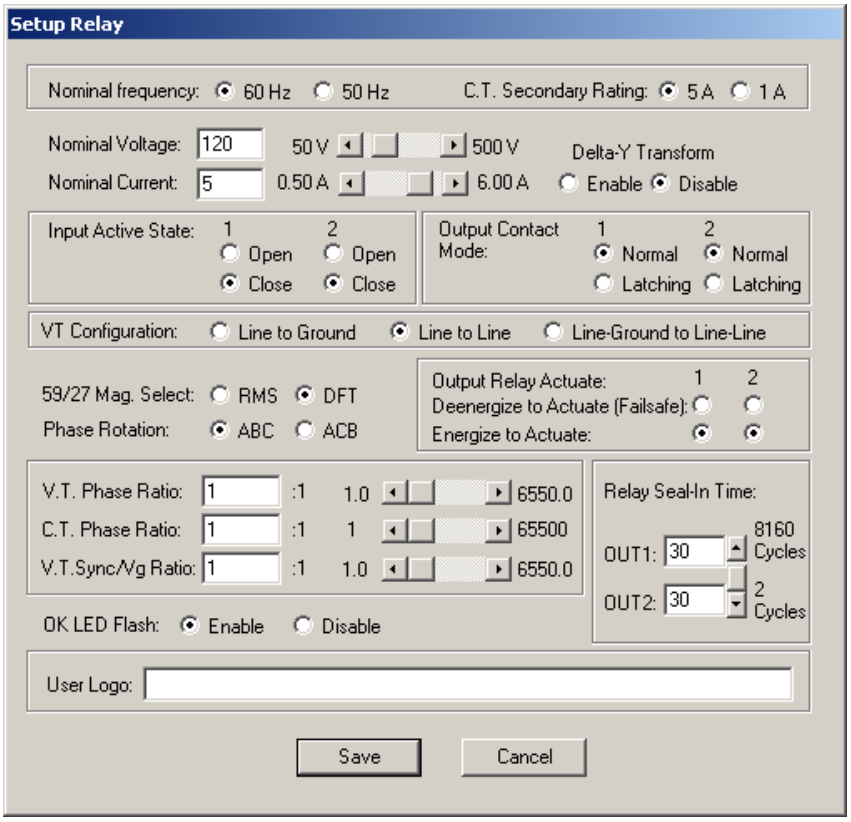

Figure 4-4 M-3810A IPScom® Setup Relay Dialog Box

Path: Relay menu / Setup submenu / Setup Relay command

COMMAND BUTTONS

Save When connected to a protection system, sends the currently displayed information to the unit. Otherwise, saves the currently displayed information.

Cancel Returns you to the IPScom main window; any changes to the displayed information are lost.

■ **NOTE:** Checking the inputs for the Active Input Open parameter designates the “operated” state established by an *opening* rather than a closing external contact.

The **Setpoints** command displays the Relay Setpoints dialog box (see Figure 4-5, below) from which the individual relay function dialog boxes can be accessed. Choosing a Relay function will display the corresponding function dialog box (see Figure 4-6 for example).

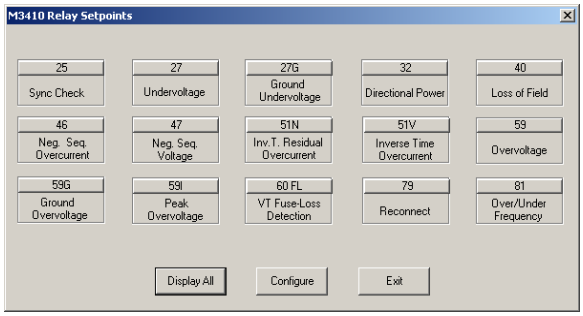

Figure 4-5 M-3810A IPScom® Relay Setpoints Dialog Box

Path: Relay menu / Setup submenu / Setpoints window

COMMAND BUTTONS

Display All Opens the All Setpoints Table dialog box.

Configure Opens the Configure dialog box.

Exit Saves the currently displayed information and returns you to the IPScom main window.

The Relay Setpoints dialog box provides access to two additional dialog boxes: **Display All** and **Configure**.

Choosing the **Display All** command displays the All Setpoints Table dialog box (see Figure 4-7). This dialog screen contains a list of settings for each relay function within a single window to allow scrolling through all relay setpoint configuration values. Choosing the **Configure** command displays the Configure dialog box (see Figure 4-8), which contains a chart of programmed input and output contacts, in order to allow scrolling through all relay output and blocking input configurations. Both dialog boxes (All Setpoint Table and Configure), feature hotspots which allows the user to jump from a scrolling dialog box to an individual relay function dialog box and return to the scrolling dialog box again. All available parameters can be reviewed or changed when jumping to a relay configuration dialog box from either scrolling dialog box.

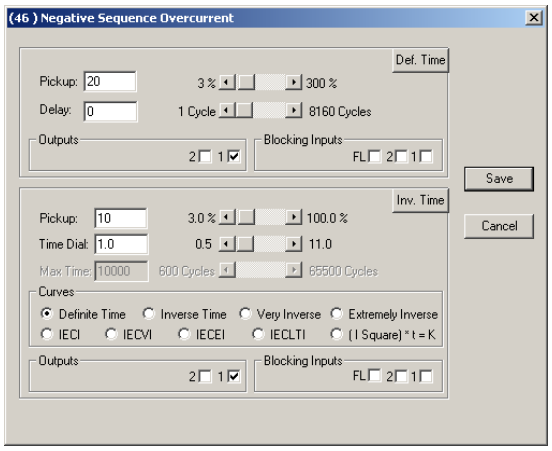

Figure 4-6 M-3810A IPScom Negative Sequence Overcurrent Setpoint Dialog Box

Path: Relay menu / Setup submenu / Setpoints window/ 46 command button

COMMAND BUTTONS

Save When connected to a protection system, sends the currently displayed information to the unit. Otherwise, saves the currently displayed information and returns you to the Relay Setpoints, All Setpoints Table, or Configure dialog box.

Cancel Returns you to the Relay Setpoints, All Setpoints Table, or Configure dialog box; any changes to the displayed information are lost.

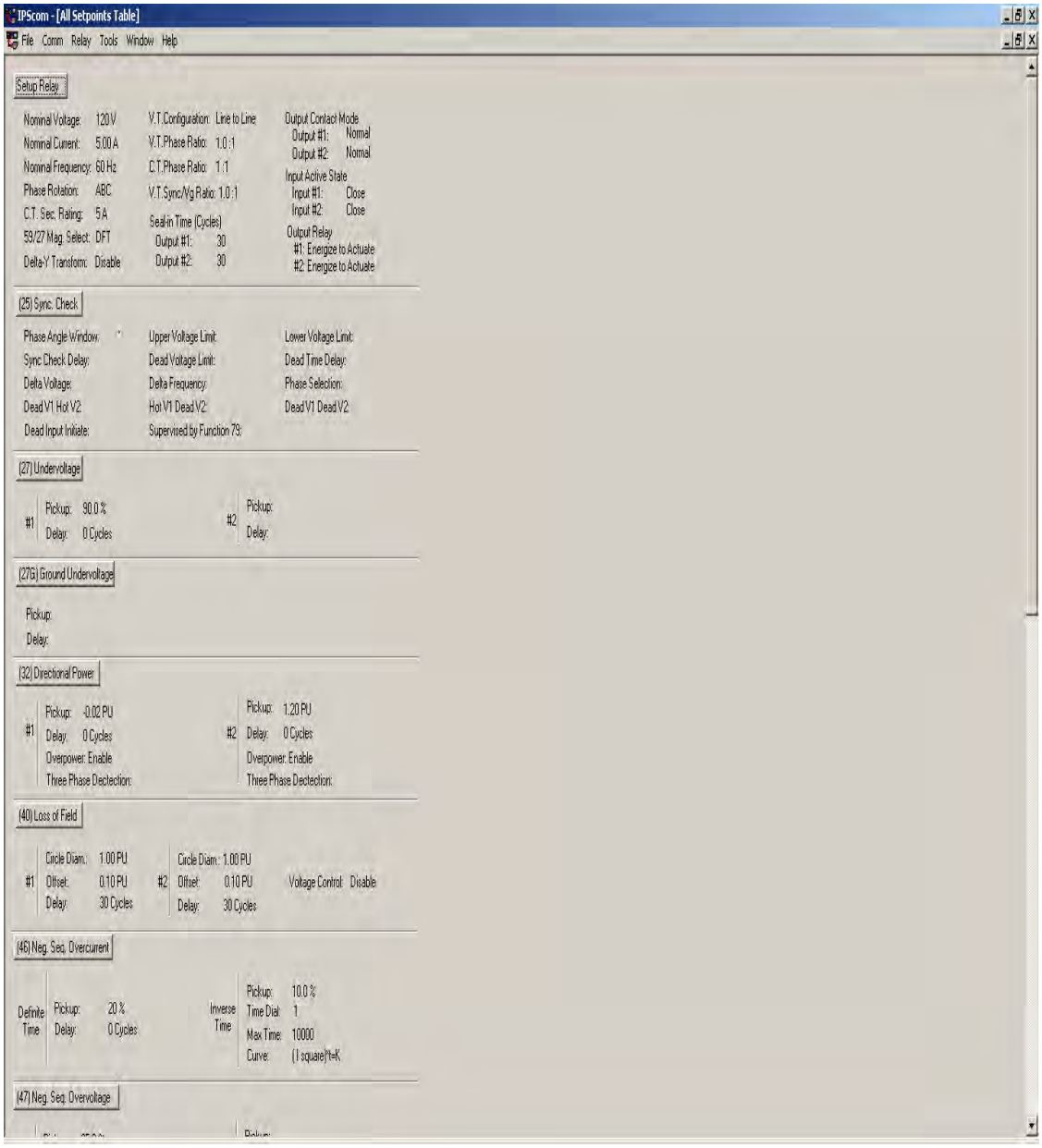

Figure 4-7 M-3810A IPScom® All Setpoints Table Dialog Box

Path: Relay menu/Setup submenu/Setpoints window/Display All command button

CONTROL MENU

Close Returns you to the Relay Setpoints dialog box.

Move Allows you to reposition the dialog box.

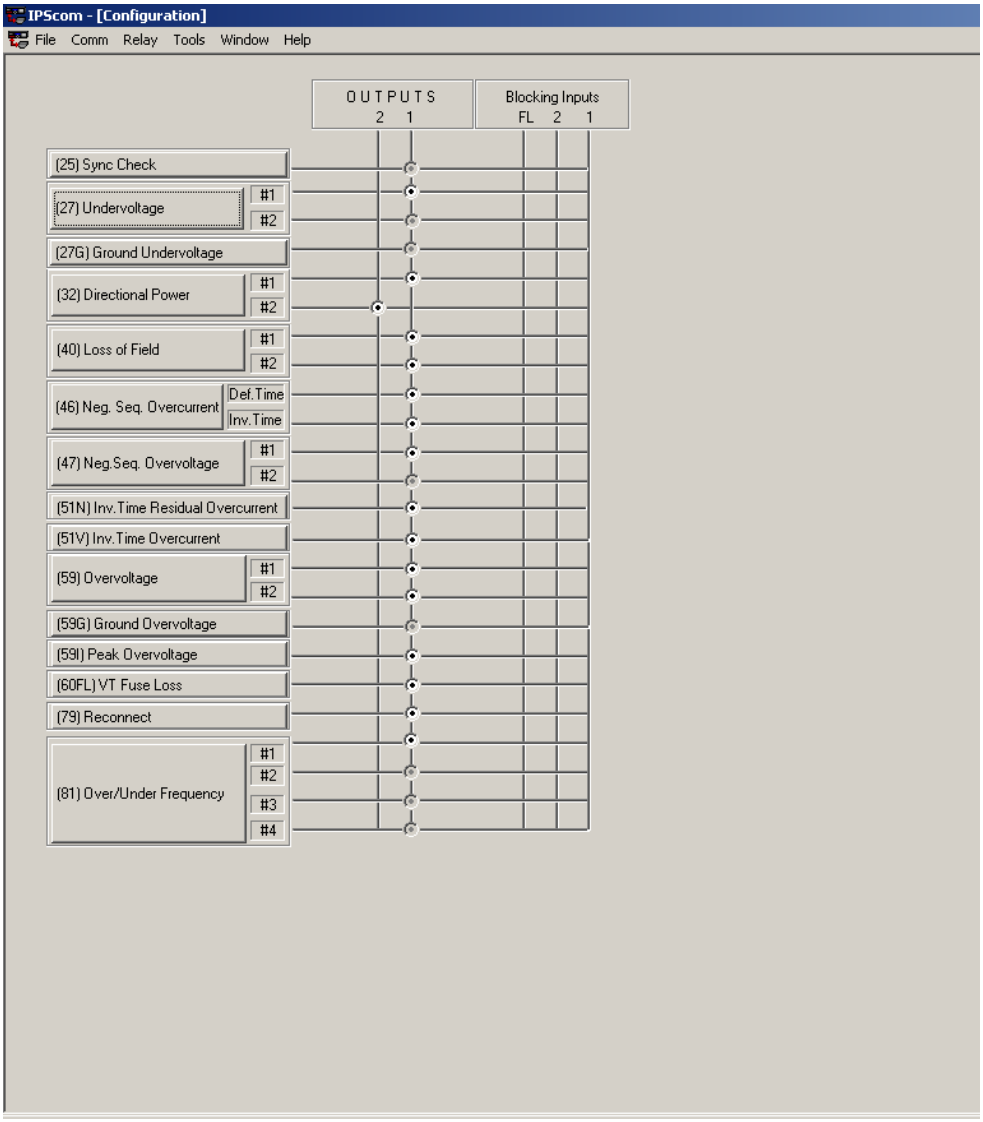

Figure 4-8 M-3810A IPScom® Configure Dialog Box

Path: Relay menu / Setup submenu / Setpoints window/ Configure command button

The **Set Date/Time** command allows relay date and time to be set.

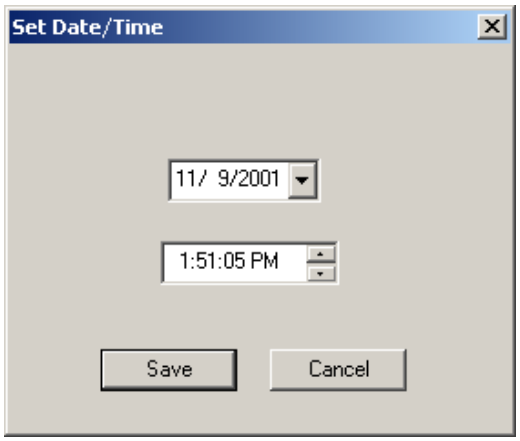

Figure 4-9 M-3810A IPScom® Set Date/Time Dialog Box

Path: Relay menu/ Setup submenu/ Set Date/Time Command

The time field in the dialog box is not updated continuously. The time at which the dialog box was opened is the time that is displayed and remains as such.

COMMAND BUTTONS

Save Saves all input.

Cancel Returns you to the IPScom main window. Any changes to the displayed information is lost.

The **Monitor** submenu provides access for reviewing the present status of the relay's measured and calculated values, other real-time parameters and conditions as well as examining real-time and historical demand metering information. A cascading menu appears, providing several command options, **Primary Status**, **Secondary Status**, **Loss of Field**, **Sync Scope**, and **Function Status**.

Primary and Secondary Status screens will display calculated values based on the VT and CT inputs (see Figures 4-24 and 4-25).

Loss-of-Field dialog shows a graphic representation of loss-of-field settings as well as positive sequence impedance (see Figure 4-26).

Sync Scope screen displays a phasor representation of generator and incoming voltage. The display should not be used to manually synchronize the generator (see Figure 4-27) due to time latency issues.

Function Status screen displays the status of various functions, including trip and pickup status (see Figure 4-28).

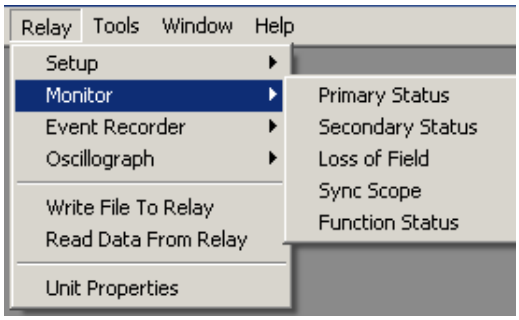

The **Event Recorder** submenu provides three command options: **Setup, Display,** and **Clear History**.

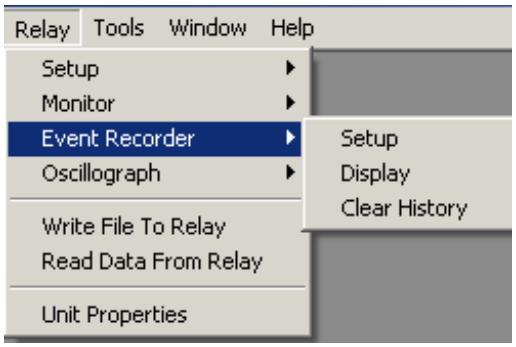

The **Setup** command displays the Event Trigger settings dialog box.

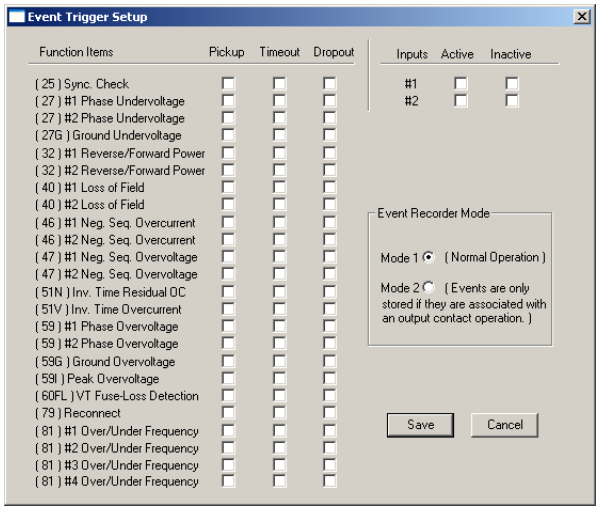

Figure 4-10 M-3810A IPScom® Event Trigger Setup

The **Display** command displays the Event List dialog box. An “Event” consists of a time-stamp, the status of the contact inputs, state of the control/status inputs, status of fuse-loss logic, the magnitude of the voltages and currents at the time the event occurred, and a description of the event itself.

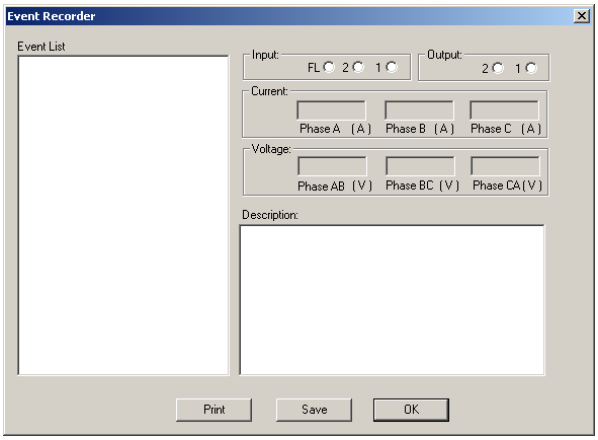

Figure 4-11 M-3810A IPScom Event List Dialog Box

The **Clear History** command clears all stored data.

The **Oscillograph** submenu allows selected parameter data to be displayed for review and plotting at a later time.

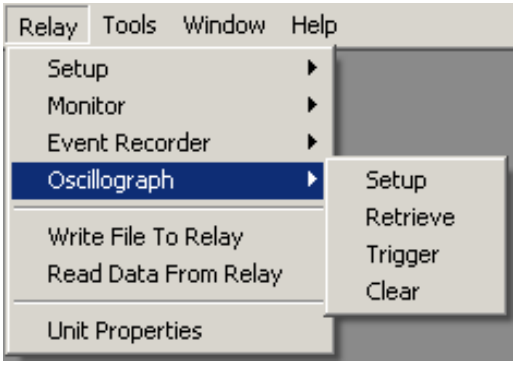

The **Setup** command allows the user to set the number of records and triggering designations to be made.

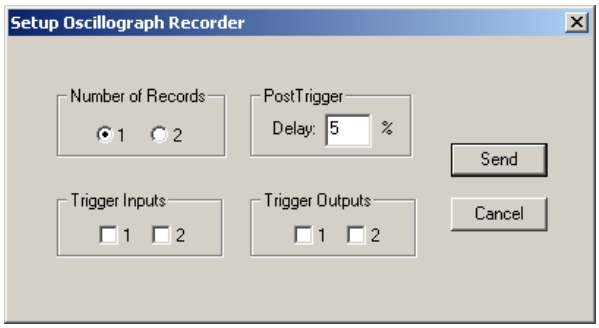

Figure 4-12 M-3810A IPScom Setup Oscillograph Recorder Dialog Box

The **Retrieve** command downloads and stores collected data to a file; **Trigger** allows the manual triggering of the recorder; **Clear** erases the existing records. The optional M-3801D IPSplot® PLUS Oscillograph Analysis Software program can be used to view the downloaded oscillograph files or by third party Common Format for Transient Data Exchange (COMTRADE) format viewer software.

The **Write File To Relay** command is used to write the data to the relay. The **Read Data From Relay** command is used to retrieve the data from the relay to the computer for display.

Tools Menu

The Tools menu provides an **Access Code** submenu and five commands: **Diagnostics, Calibration, Relay Software Update, Relay Com Setup**, **Relay Defaults Setup**, and **Option**.

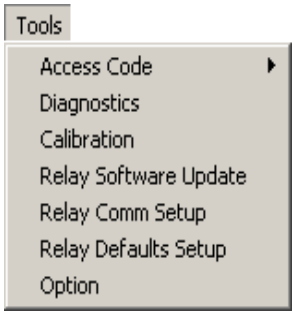

Access Code Submenu

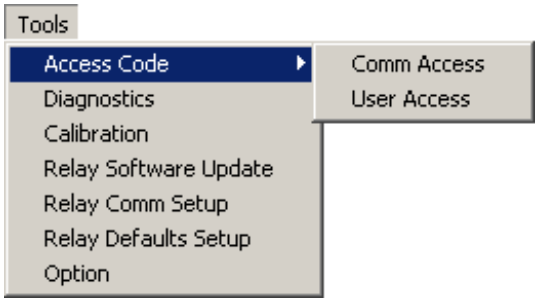

The **Access Code** submenu includes two commands: **Comm Access** and **User Access**, which allow authorized users to define or revise access levels for the relay and for individual system users.

There are four (4) access codes, all default (9999):

- **Communication Access Code**
- **User Access Level 1 Code**
- **User Access Level 2 Code**
- **User Access Level 3 Code**

Function	Level 1	Level 2	Level 3
File (All Features)	R	R	R
Comm (All Features)	R	R	R
Relay/Setup/Setup Relay	R	R	R/W
Relay/Setup/Setpoints	R	R/W	R/W
Relay/Setup/Set Date/Time	R	R/W	R/W
Relay/Monitor (All Features)	R/W*	R/W*	R/W*
Relay/Event Recorder/Setup	R	R/W	R/W
Relay/Event Recorder/Display	R	R/W	R/W
Relay/Event Recorder/Clear History	R	R/W	R/W
Relay/Oscillograph/Setup	R	R/W	R/W
Relay/Oscillograph/Retrieve	R	R/W	R/W
Relay/Oscillograph/Trigger	R	R/W	R/W
Relay/Oscillograph/Clear	R	R/W	R/W
Relay/Write File to Relay			R/W
Relay/Read Data from Relay	R	R	R
Relay/Unit Properties	R	R	R
Tools (All Features)			R/W
Window (All Features)	R	R	R
Help (All Features)	R	R	R
** W = Reset LED Capability*			

Table 4-1 M-3810A IPScom®
User Access Code Level Privileges

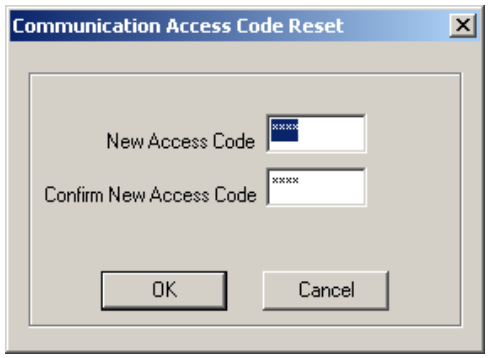

Figure 4-13 M-3810A IPScom® Comm Access Code Reset

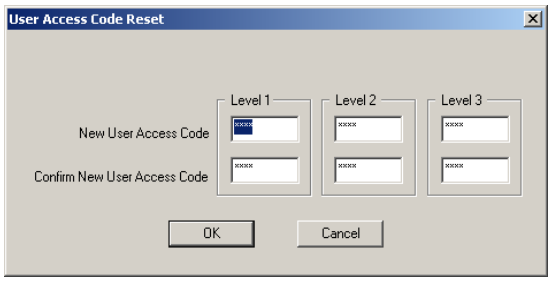

Figure 4-14 M-3810A IPScom User Access Code Reset

Diagnostics Command

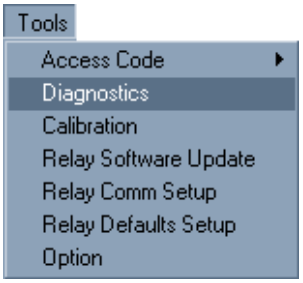

The Diagnostics command displays the Relay Test window that includes three relay tests which provide a means to test input and outputs and relay communication ports.

Also included in Diagnostics is a Current Status screen which includes a time stamped relay software error log that can be reset, an output counter that also can be reset and the time and date of the last relay power up.

Input/Output Test

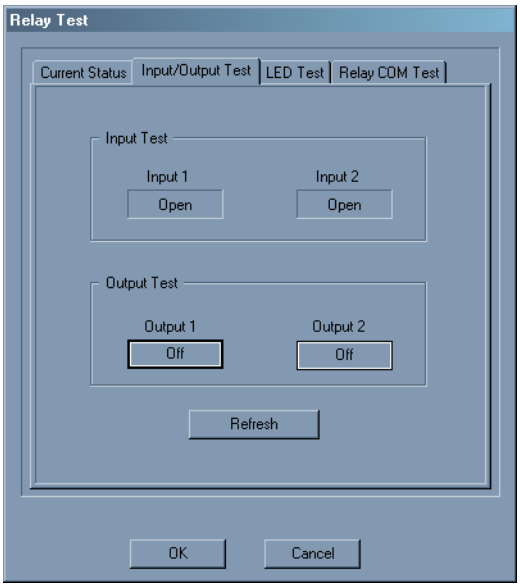

Figure 4-15 M-3810A IPScom Input/Output Test Panel

COM Test

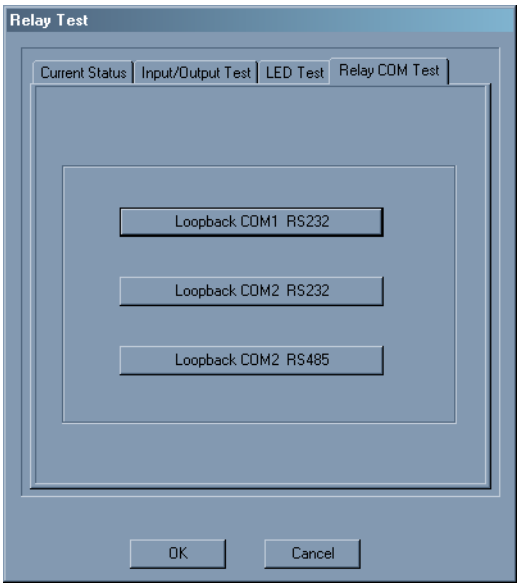

Figure 4-16 M-3810A IPScom COM Test Panel

Current Status

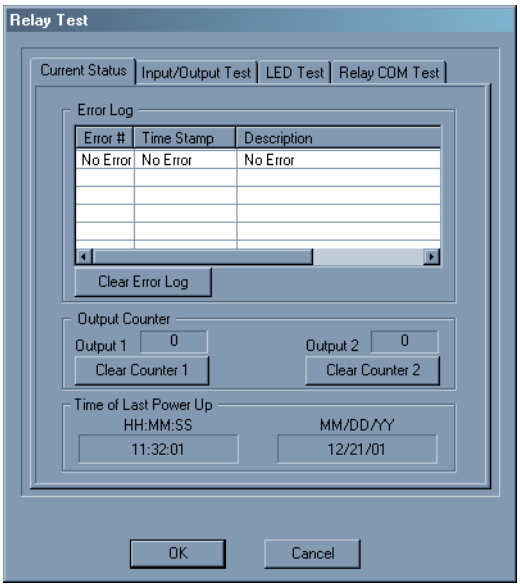

Figure 4-17 M-3810A IPScom® Current Status Panel

Calibration Command

The Calibration command permits the user to recalibrate the relay. Since Beckwith Electric relays are factory calibrated for optimum operation, we recommend that you contact Beckwith Electric Co. prior to utilizing this command.

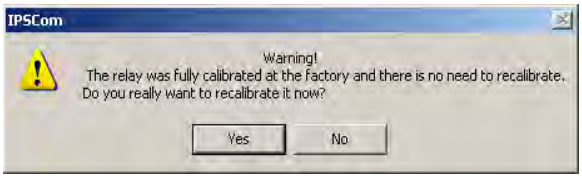

Figure 4-18 M-3810A IPScom Calibration

Relay Software Update Command

This command automatically downloads and installs any updates to the relay resident software.

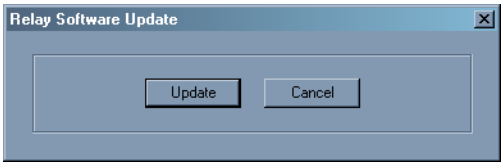

Figure 4-19 M-3810A IPScom Relay Software Update

Relay Comm Setup

This command displays the Relay COMM Setup Window, which provides the means to select the relay Com port, baud rate, stop bits, parity, and relay address.

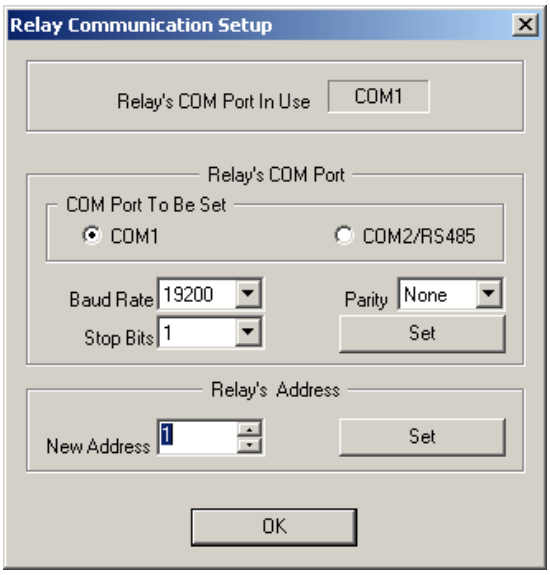

Figure 4-20 M-3810A IPScom Relay COM Setup Window

Relay Defaults Setup

The Relay Defaults Setup command allows the user to load factory setpoint and calibration defaults.

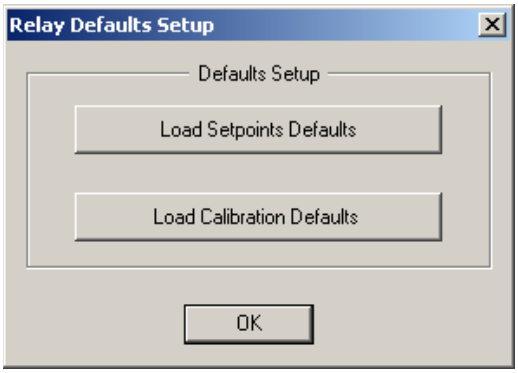

Figure 4-21 M-3810A IPScom® Relay Defaults Setup

Option Command

The Option command displays the Option Window, which provides the means to select Time Delays displayed in either cycles or milliseconds.

The Communication Retry feature sets the number of the times that IPScom will attempt to establish communication with the relay. The number of retry attempts can be set from 0 to 5, with 0 setting not allowing a retry. The Communication Timeout setting establishes the duration in seconds that IPScom will wait to establish communication with the relay. The Timeout value can be set to 1, 2, 4, 8, or 16 seconds.

The Packet Size setting determines packet size when retrieving Oscillographic data from the relay. It can be set to either Regular (communication driver will try large packet size to reduce transfer time) or Minimum (communication driver uses smaller packet size if line is noisy).

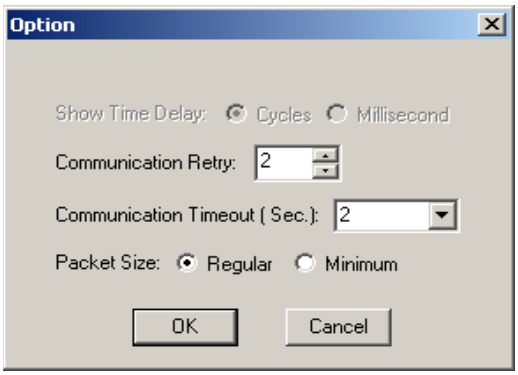

Figure 4-22 M-3810A IPScom Option Dialog Box

Help Menu

The **Help** menu provides two commands. The **About** command provides information about the version of IPScom currently installed.

The **Contents** command initiates a link to a PDF (Portable Document File) version of this instruction book for easy reference. An Adobe Acrobat® reader is required to view this document.

The M-3410A Instruction Book has been indexed to its table of contents. By selecting the 'Navigator pane' in Adobe Acrobat Reader, the user can directly access selected topics.

The **About** IPScom® Dialog Box displays IPScom version and development information.

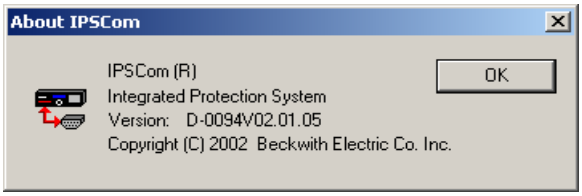

Figure 4-23 M-3810A IPScom About IPScom Dialog Box

Path: Help menu / About... command

COMMAND BUTTONS

OK Exits the currently displayed dialog box.

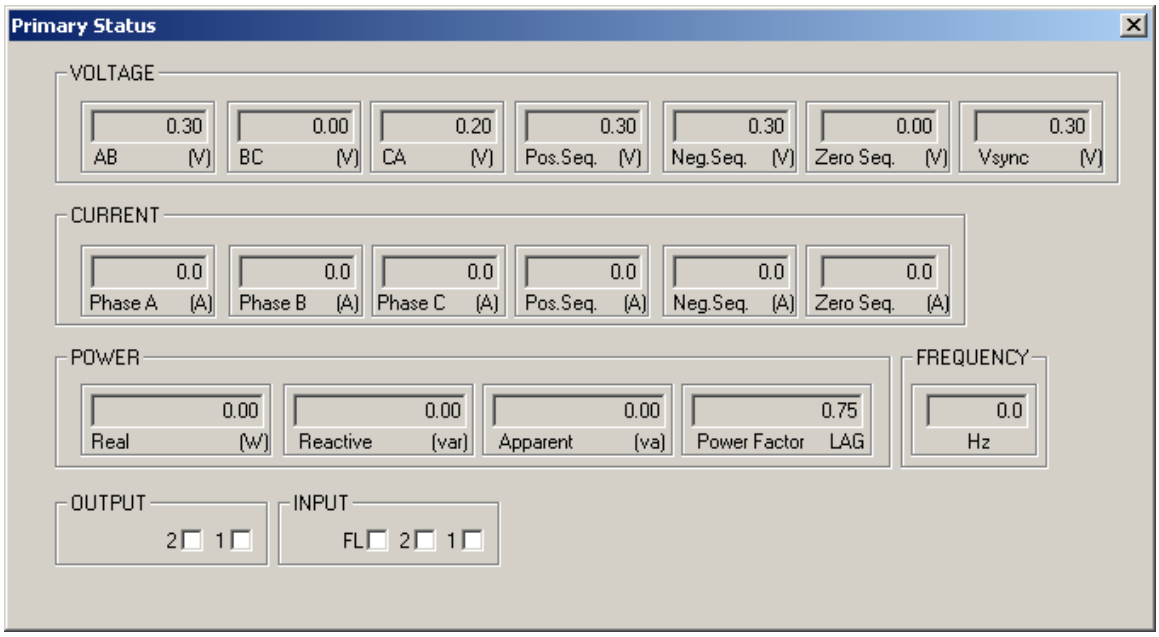

Figure 4-24 M-3810A IPScom® Primary Status Dialog Box

Path: Relay menu/Monitor submenu/ Primary Status window

These are calculated values based on the VT and CT inputs.

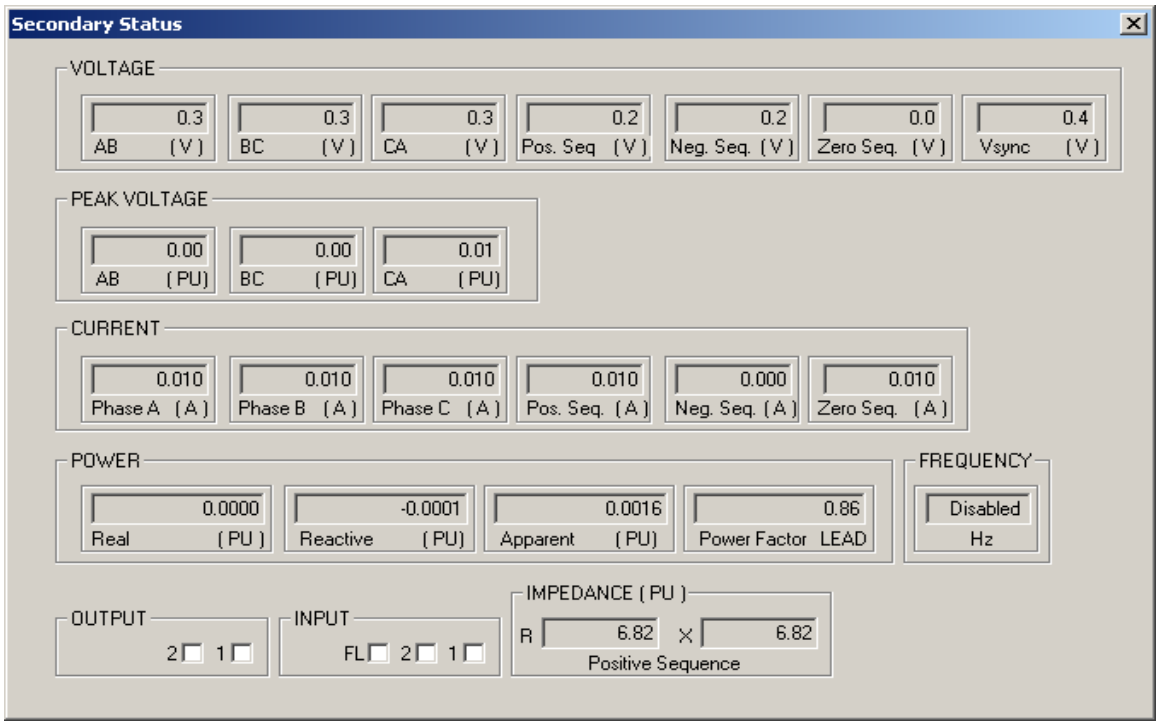

Figure 4-25 M-3810A IPScom Secondary Status Dialog Box

Path: Relay menu/ Monitor submenu/ Secondary Status window

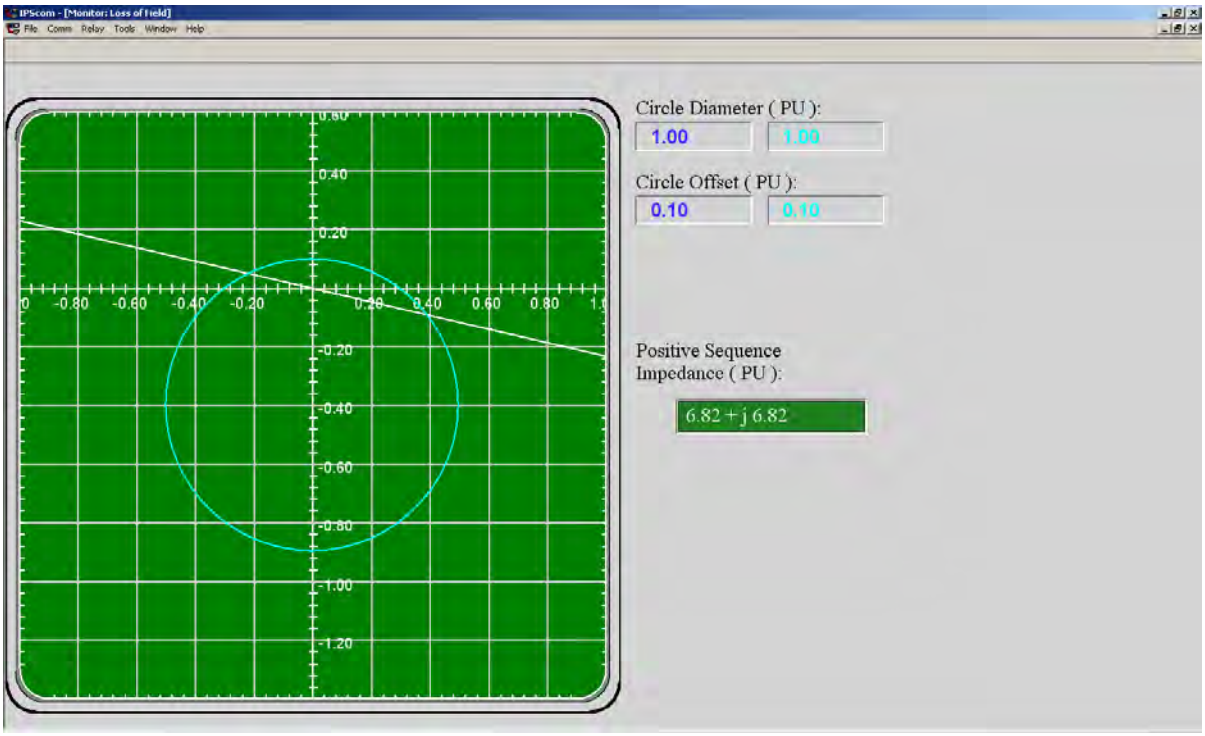

Figure 4-26 M-3810A IPScom® Loss of Field Dialog Box

Path: Relay menu/Monitor submenu/Loss of Field window

Loss-of-Field window shows a graphic representation of loss-of-field settings, and also displays the positive sequence impedance.

CONTROL BUTTONS

	Move up the scope window
	Move down the scope window
	Move the scope window to the left
	Move the scope window to the right
	Zoom In
	Zoom Out
	Refresh Scope Window

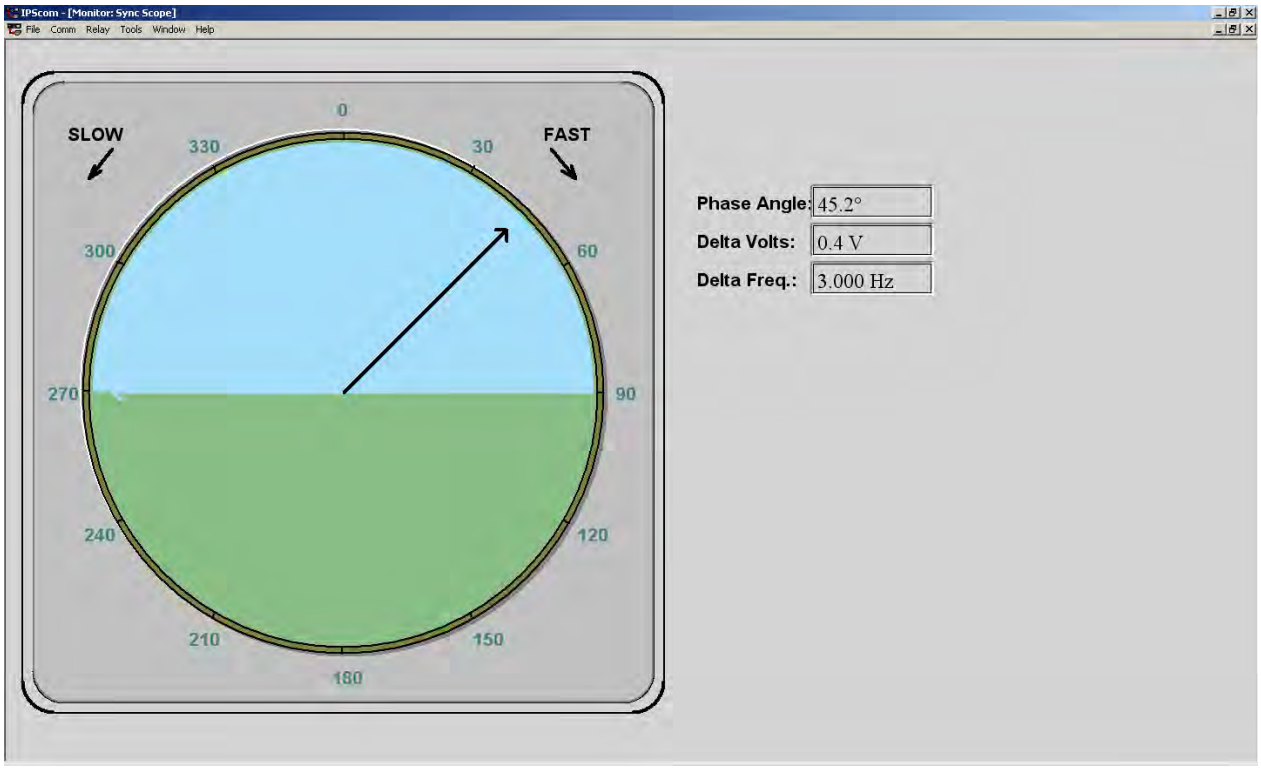

Figure 4-27 M-3810A IPScom® Sync Scope

▲ **CAUTION**: The M-3410A Sync Scope should not be used to determine in phase conditions for manual synchronizing because of possible communications time delay.

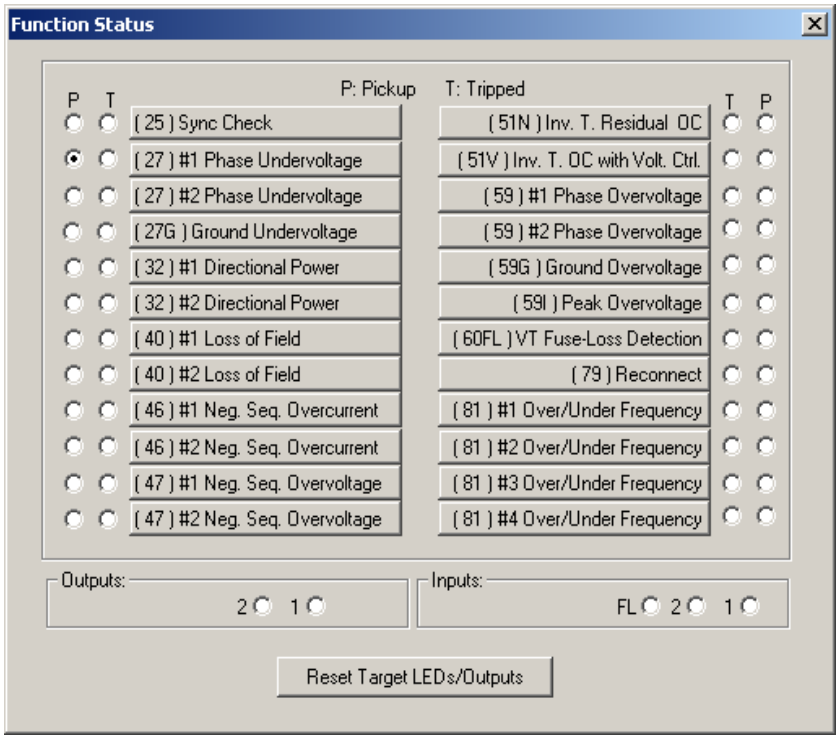

Figure 4-28 M-3810A IPScom® Function Status Dialog Box

Path: Relay menu / Monitor submenu / Function Status window

Function Status window shows the status of various functions, with “T” representing the function which has tripped, and “P” representing the function which has picked up and is timing.

The **Reset Target LED/Outputs** command, when selected, issues an unlatch command to reset output contacts when the output contact mode is set to “Latching” and clears target LEDs of previously tripped functions.

4.4 Cautions

System and IPScom Compatibility

Every attempt has been made to maintain compatibility with previous software versions. In some cases (most notably with older protection systems), compatibility cannot be maintained. If there is any question about compatibility, contact the factory.

Time and Date Stamping

Time and date stamping of events is only as useful as the validity of the unit's internal clock. Under the **Relay** menu, the **Set Date/Time** command allows the user to manually set the unit's clock.

Echo Cancel

The **Echo Cancel** check box, under the **Comm** menu, should only be used when several relays are connected using a fiber optic loop network. Otherwise, echo cancel must *not* be selected or communication will be prevented.

Serial Port Connections

If the serial port is connected to something other than a modem, and an IPScom modem command is executed, the results are unpredictable. In some cases, the computer may have to be reset.

4.5 M-3410A Battery Replacement

▲ **CAUTION:** Personnel performing this procedure should be trained in Electrostatic Discharge prevention to prevent damage to ESD sensitive components. Check and comply with appropriate regulations regarding the disposal of lithium batteries.

WARNING: Operating personnel must not remove the cover or expose the printed circuit board while power is applied. IN NO CASE may the circuit-based jumpers be moved with power applied.

WARNING: Dangerous voltages may exist even when power is disconnected! Power must be removed, and circuits discharged, before working on the unit.

WARNING: The protective grounding terminal must be connected to earth any time external connections have been made to unit.

WARNING: DO NOT open live CT circuits. Live CT circuits should be shorted prior to disconnecting CT wiring to the M-3410A. Death or severe electrical shock can occur.

1. Remove power, current, and potential inputs from the relay.
2. Remove the screws that retain the rear cover, lift the rear cover off the relay.

WARNING: The protective grounding terminal must be connected to an earth line any time external connections have been made to unit.

3. Remove the six screws that retain the CPU board to the I/O board.
4. Disconnect the CPU board from the I/O board by pulling the board away from the I/O board. Moderate force will be needed to accomplish this.

WARNING: Danger of explosion if battery is incorrectly replaced!

5. Remove the old battery from the CPU board and replace with a fresh CR 2032 (Beco #430-00402) or equivalent.
6. Reinstall the CPU board onto the I/O board by reversing the removal process.
7. Insert the six screws that retain the CPU board to the I/O board.
8. Reinstall the rear cover on the relay; insert the screws that retain the rear cover.
9. Reapply power, current, and potential inputs to the relay.
10. Reset unit time and date (from the **Relay** menu, select **Set Date/Time**).
11. Verify proper operation of the relay.
12. Properly dispose of battery, following local requirements.

5 Testing

5.1 Equipment/Test Setup 5–2

5.2 Diagnostic Test Procedures 5–4

5.3 Auto-Calibration 5–6

5.4 Functional Test Procedures 5–8
25 Sync Check 5–9
27 Phase Undervoltage, 3-Phase (#1 or #2) 5–11
27G Ground Undervoltage 5–12
32 Directional Power, 3-Phase (#1 or #2) 5–13
40 Loss-of-Field (#1 or #2) 5–14
46 Negative Sequence Overcurrent Definite Time (Current Unbalance) 5–16
46 Negative Sequence Overcurrent Inverse Time (Current Unbalance)–Generator Protection 5–17
46 Negative Sequence Overcurrent Inverse Time (Current Unbalance)–Intertie Protection 5–18
47 Negative Sequence Overvoltage (Voltage Unbalance) (#1 or #2) 5–19
51N Inverse Time Residual Overcurrent 5–20
51V Inverse Time Overcurrent with Voltage Control or Voltage Restraint 5–21
59 Phase Overvoltage, 3-Phase (#1 or #2) 5–22
59G Ground Overvoltage 5–23
59I Peak Overvoltage, 3-Phase 5–24
60FL Fuse Loss 5–25
79 Reconnect Time Delay 5–26
81 Over/Under Frequency (#1, #2, #3, #4) 5–27

5.1 Equipment/Test Setup

No calibration is necessary, as the M-3410A Intertie/ Generator Protection Relay is calibrated and fully tested at the factory. If calibration is necessary because of a component replacement, follow the Auto Calibration procedure detailed in Section 5.3, Auto Calibration.

Equipment Required

The following equipment is required to carry out the test procedures:

1. Two Digital Multimeters (DMM) with 10 A current range.
2. Appropriate power supply for system power.
3. Three-phase independent voltage sources (0 to 150% of nominal voltage) with variable phase to simulate VT inputs.
4. Three-phase independent current sources (0 to 300% of the CT rating of 1 A or 5 A) with variable phase to simulate CT inputs.
5. Electronic timer accurate to at least 8 ms.

Setup

■ **NOTE**: The proper voltage range for the relay is clearly marked on the power supply label affixed to the rear cover.

1. Connect system power to the power input terminals TB2-28 (hot) and TB2-27 (neutral). The relay can be ordered with a nominal input power supply of 12 V dc, 24 V dc, 48 V dc, or 120 V ac/125 V dc.
2. For each test procedure, connect the voltage and current sources according to the configuration listed in the test procedure and follow the steps outlined. When the testing of one function may cause another function to operate depending on the particular settings, it is recommended the untested function be disabled. (See Table 5-1, Functions to Disable When Testing.)

		FUNCTION TO BE DISABLED													
FUNCTION BEING TESTED	25	27	27G	32	40	46	47	51N	51V	59	59G	59I	60-FL	79	81
25		✓	✓				✓			✓	✓	✓	✓		✓
27	✓												✓	✓	
27G	✓										✓				
32					✓								✓	✓	
40		✓		✓									✓	✓	
46		✓												✓	
47	✓	✓											✓	✓	
51N															
51V															
59	✓											✓	✓	✓	
59G	✓		✓												
59I	✓									✓			✓	✓	
60FL		✓					✓			✓				✓	
79															
81	✓													✓	

Table 5-1 Functions to Disable When Testing

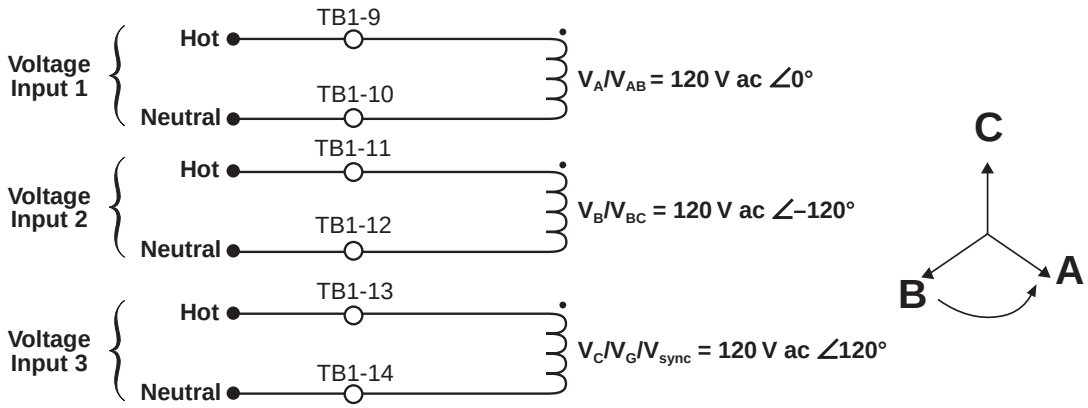

Figure 5-1 Voltage Inputs: Configuration V1

■ **NOTE**: Line-Ground and Line-Ground-to-Line-Line VT configuration uses V_A, V_B and V_C inputs and L-L VT configuration uses V_{AB}, V_{BC}, and V_{sync} inputs.

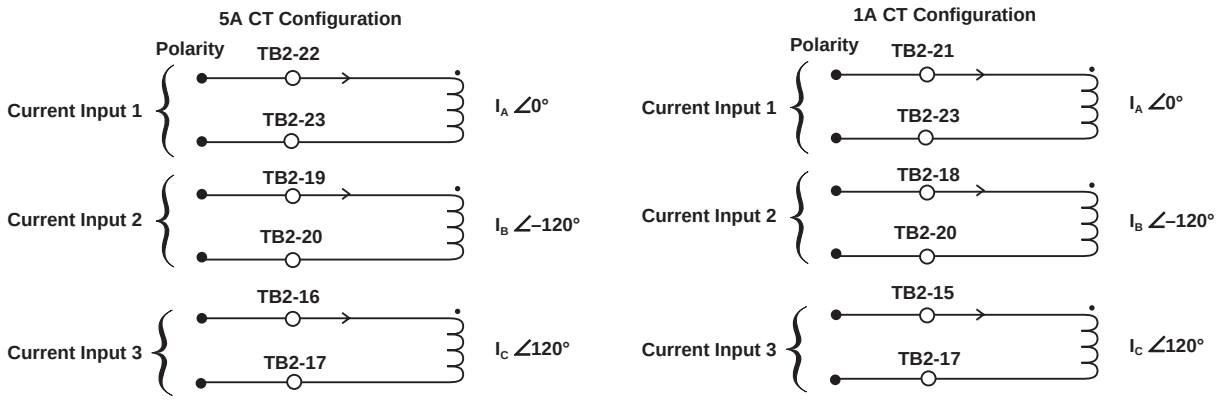

Figure 5-2 Current Inputs: Configuration C1

■ **NOTE**: The phase angles shown here use leading angles as positive and lagging angles as negative. Some manufacturers of test equipment have used lagging angles as positive, in which case V_B=120 V ∠120° and V_C=120 V ∠ 240°. Similarly other voltage and current phase angles should be adjusted. These test configurations are for ABC phase rotation. They must be adjusted appropriately for ACB phase rotation.

5.2 Diagnostic Test Procedures

WARNING: These tests should NOT be performed when the relay is connected to the system. Failure to isolate the relay from the system can result in trip signals to the system.

The diagnostic procedures perform basic functional tests to verify the operation of the front-panel indicators, inputs and outputs, and communication ports. These tests are performed in relay test mode, which is entered by selecting **Diagnostics** from the **Tools** Menu of M-3810A IPScom® for Windows™.

Output Test (Relay)

■ **NOTE**: All outputs are shown in the de-energized state for standard reference. Relay standard reference is defined as protective elements in the non-trip, reconnection and sync logic in the non-asserted state, or power to the relay is removed.

The first step in testing the operation of the relay outputs is to verify the positions of the outputs in the unoperated or standard reference position. This is accomplished by connecting a DMM (Digital Multimeter) across the appropriate contacts and verifying open or close condition. The standard reference (unasserted) position for each output is listed in Table 5-2.

Relay Output Number	Contact	Option B1	Option B2	Option B3
1	TB-1 & TB-2	NO	NC	NC
2	TB-3 & TB-4	NO	NO	NC

Table 5-2 Output Contacts

Following verification of output contact positions in the standard reference position, the output can be asserted by selecting the appropriate output from the **Output Test** section of the **Input/Output** test screen.

The DMM can now be used to verify the position of the output contacts in the asserted position. The readings should be the opposite of the initial reading in Table 5-2. All outputs should be returned to their initial unasserted positions.

Control/Status Input Test

The **INPUT/OUTPUT Test** menu allows the user to determine the status of the individual status inputs.

Input Number	Common Terminal	Terminal
1	TB-26	TB-25
2	TB-26	TB-24

Table 5-3 Control/Status Inputs

Alternatively, if this specific input is being used in this application and the external wiring is complete, the actual external status contact can be manually exercised. This will test the external status contact operation *and* the external wiring to the control/status inputs. The status of the appropriate input is immediately displayed on the **INPUT/OUTPUT Test** screen.

Output Test (Self-Test Relay)

Testing the Relay Self-Test Output Contacts is accomplished as follows:

1. Verify that power has been removed from the relay.
2. Verify that Self-Test Relay contact status is consistent with Table 5-4.

Relay Output Number	Form 'C' Contact
3	TB-5 to TB-6 NC TB-6 to TB-7 NO
**Normal position of the contact corresponds to the standard reference state of the relay*	

Table 5-4 Self-Test Ouput Contacts

3. While monitoring self-test contact status, apply power to the relay and verify the following:
   a. Diagnostic LED illuminates momentarily.
   b. Relay OK LED flashes quickly during relay self-test.
   c. Relay OK LED flashes at a slower rate, indicating completion of self-test.

4. If Self-Test routine does not identify any relay errors, the self-test relay contact status will be energized.
5. If Self-test routine identifies a relay error, the self-test relay will de-energize, with the contact status consistent with the information in Table 5-4.

Target LED Test

The **LED TEST** menu allows the user to check the Target LEDs individually.

COM Test

This feature allows the user to verify the operation of the front panel RS-232 COM1 port and the rear panel COM2 port when configured for either RS-232 or RS-485.

COM1 Loopback Test

1. Verify that the following conditions exist:
   - Power is available to the relay.
   - An RS-232 Loopback Plug (See Figure 5-3, below) is connected to the COM1 port.

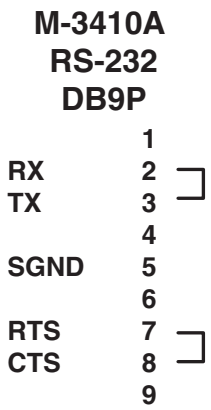

Figure 5-3 RS-232 Loopback Plug

■ **NOTE**: The loopback plug required consists of a DB9P connector (male) with pin 2 (RX) connected to pin 3 (TX) and pin 7 (RTS) connected to pin 8 (CTS). No other connections are necessary.

   - Communication with the relay has been established through COM2 (either RS-232 or RS-485)
2. Select **Loopback COM1 RS232** from the **Relay/Diagnostics/Relay Com Test** menu.
3. The system will report back either “Pass” or “Fail”.

COM2 RS-232 Loopback Test

1. Verify that the following conditions exist:
   - Power is available to the relay
   - An RS-232 Loopback Plug (See Figure 5-3, COM1/COM2 Loopback Plug) is connected to the COM2 port.
   - IO Board jumpers JP3 and JP4 are configured for COM2 = RS-232 (See Table 2-1, Jumpers)
   - Communication with the relay has been established though COM1.
2. Select **Loopback COM2 RS-232** from the M-3810A IPScom® for Windows™ **Relay/ Diagnostics/Relay Com Test** menu.
3. The system will report back either “Pass” or “Fail”

COM2 RS-485 Loopback Test

1. Verify that the following conditions exist:
   - Power is available to the relay.
   - The RS-485 terminals have been configured for Loopback testing (See Figure 5-4.)
   - IO Board jumpers JP3 and JP4 are configured for COM2 = RS-485 (See Table 2-1, Jumpers)
   - Communication with the relay has been established through COM1.

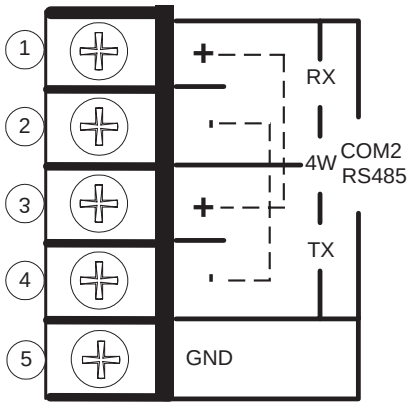

Figure 5-4 RS-485 4-Wire Loopback Configuration

2. Select **Loopback COM2 RS-485** from the M-3810A IPScom for Windows **Relay/ Diagnostics/Relay Com Test** menu.
3. The system will report back either “Pass or “Fail”

5.3 Auto Calibration

■ **NOTE:** The M-3410A Intertie/Generator Protection Relay has been fully calibrated at the factory. There is no need to recalibrate the unit prior to initial installation. Calibration can be initiated using the IPScom® program.

Use a voltage and current source consistent with the accuracies stated in the M-3410A Specification. The Auto Calibration feature is accessed from the **Tools** Menu. Auto Calibration of the relay is accomplished by performing the following:

1. Ensure the protected component is either not running/open or Auto Start/Closure has been disabled.
2. Ensure communication has been established with the relay.
3. Verify that nominal frequency, nominal voltage and CT. Rating and ratios (if applicable) have been entered in the IPScom **Setup Relay** screen.

WARNING: DO NOT remove auxiliary current transformers without shorting the current inputs. Death or severe electrical shock can occur.

4. Configure voltage and current input sources as indicated in Figure 5-5, Current Input Configuration, and Figure 5-6, Voltage Input Configuration.
5. Utilizing a voltage and current source apply the nominal voltage and appropriate CT amp rating (1 A or 5 A) to the unit.
6. Select **Calibration** from the M-3810A IPScom for Windows™ **Tools** drop-down menu.
7. Select **Yes** at the recalibrate warning screen.
8. Select **START** from the M-3810A IPScom for Windows **AutoCal Process** screen.
9. Upon completion of the **AutoCal Process** the relay will report status.
10. Calibration complete.
11. Check metering to insure correct calibration.

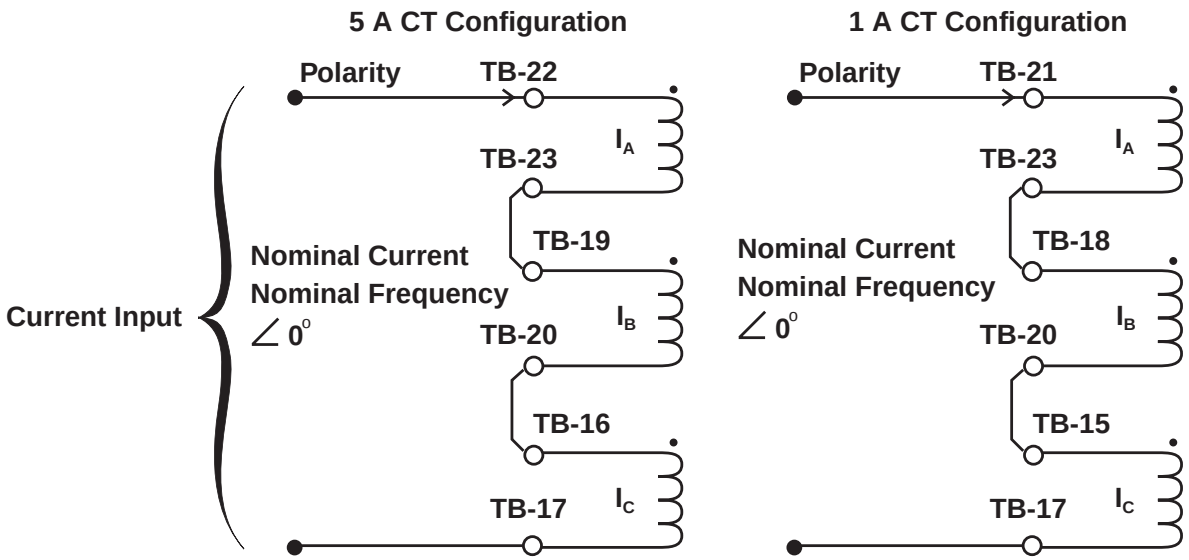

Figure 5-5 Current Input Configuration

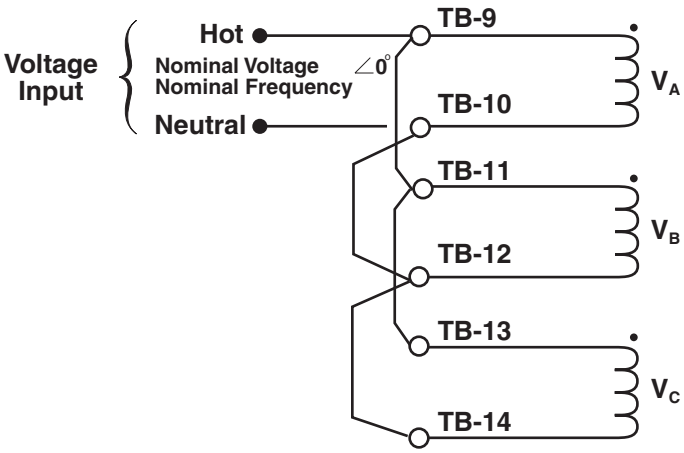

Figure 5-6 Voltage Input Configuration

5.4 Functional Test Procedures

WARNING: These tests should NOT be performed when the relay is connected to the system. Failure to isolate the relay from the system can result in trip signals to the system.

This section details test quantities, inputs and procedures for testing each relay function. The purpose is to confirm the functions' designated output operation, the accuracy of the magnitude pickup settings, and the accuracy of time delay settings. Functional tests do require inputs, and the necessary connection configurations are noted.

In all test descriptions, a process for calculating input quantities to test the actual settings of the function will be given if needed. In many test cases it will be necessary to disable other functions not being tested at the time. This action is to prevent the operation of multiple functions with one set of input quantities, which could cause confusion of operation of outputs or timers. The complete description of the method to disable/enable functions may be found in detail in Section 3.1, Configure Relay subsection, or Chapter 4, **Operation**. The complete description of the method to install setting quantities may be found in Section 3.2, Setpoints and Time Settings subsection.

It is desirable to *record and confirm* the actual settings of the individual functions before beginning test procedures. Use Table A-3, System Setup Record Form and Table A-4, Relay Setpoints and Settings Record Form, found in Appendix A, Configuration Record Forms, to record settings. It is also possible to download the relay settings into a file using IPScom®.

It may be desirable to save the relay settings in IPScom to preserve desired setup, and then load the test settings. After testing is completed, the desired relay settings can be loaded into the relay from the stored file.

The tests are described in this section in ascending function number order. Depending on which functions are to be tested at a given time, an order may be determined with the aid of Table 5-1, Functions to Disable When Testing. This may result in the fewer changes in connections and disable/enable operations.

During the lifetime of the relay, testing of individual functions due to changes in application settings will be more likely than an overall testing routine. An index of the individual test procedures is illustrated at the beginning of this chapter.

NOTE: Care must be taken to reset or enable any functions that have been changed from their intended application settings when the test procedures are complete.

It is suggested that test personnel print the Display All Setpoints screen and label it "As Found" prior to starting testing, and again when all testing is complete (marking the second "As Left") to ensure that all settings have been restored.

Many options for test sequences and methods are possible. As an example, the operation of the output contacts can be tested along with the operation of the LEDs in the Diagnostic Test Procedures. The operation of the output contacts may also be confirmed with the LED and function operation during Functional Test Procedures, if desired.

If timer quantities are to be checked, the timer must be activated by the appropriate output contacts.

It is suggested that copies of the following be made for easy referral during test procedures:

Relay Configuration Table A-1 – pg A–2
Communication Data and Unit Setup Record Form Table A-2 – pg A–3
System Setup Record Form Table A-3 – pg A–4
Relay Setpoints & Settings Form Table A-4 – pg A–5

25 Sync Check

VOLTAGE INPUTS: See Below

CURRENT INPUTS: None

TEST SETTINGS:

79 Supervise 25	Disable		
Phase Angle Limit	PA	Degrees	(0 to 90)
Voltage Limits			
Upper Limit	UL	%	(100.0 to 120.0)*
Lower Limit	LL	%	(70.0 to 100.0)*
*(*Of Nominal Voltage*)			
Sync Check Delay	SD	Cycles	(1 to 8160)
Delta Voltage Limit	DVL	%	(0 to 50)
Delta Volt	DV	%	(1.0 to 50.0)
Delta Freq	DF	Hz	(0.001 to 0.500)
Dead V1	See note, below		
Dead V2	See note, below		
Dead V1 & V2	See note, below		
Dead Input Enable	DIN	Input	(1 or 2)
Dead Delay	DD	Cycles	(1 to 8160)
Programmed Outputs	Z	Output	(1 or 2)
Function 27 #1, #2	Disable		
Function 27G #1, #2	Disable		
Function 47 #1, #2	Disable		
Functions 59, 59G, 59I	Disable		
Function 81 #1,2,3,4	Disable		

■ **NOTE**: This function can only be used in line-to-line configuration. Input voltages to the function are designated as V1 and V2, where V1 can be set to either V_{ab} or V_{bc}, and V2 is V_{sync}.

1. Disable functions as shown. Refer to Section 3.2, Setpoints and Time Settings, for procedures.
2. Confirm settings to be tested.
3. ***Phase Angle Limit Test***: Apply Nominal Voltage to V1 and V2, and establish a phase angle difference of more than **PA** +5°. Hold the **TARGET RESET** button in and slowly decrease the phase angle difference until Output **Z** LED operates or the pickup indicator operates on the computer target screen. The angle difference should be equal to **PA** ±1°. Release the **TARGET RESET** button and increase the angle difference, the **OUTPUT** LED will extinguish.
4. ***Upper Voltage Limit Test***: Apply voltage 5 V higher than **UL** to both V1 and V2. Hold the **TARGET RESET** button in and slowly decrease the voltage on V1 until Output **Z** LED operates, or the pickup indicator operates on the computer target screen. The voltage should be equal to **UL** ±0.5 V or ±0.5%. Release the **TARGET RESET** button and increase the voltage, the **OUTPUT** LED will extinguish. If desired, repeat the test using V2.
5. ***Lower Voltage Limit Test***: Apply voltage 5 V lower than **LL** to both V1 and V2. Hold the **TARGET RESET** button in and slowly increase the voltage on V1 until Output **Z** LED operates, or the pickup indicator operates on the computer target screen. The voltage level should be equal to **LL** ±0.5 V or ±0.5%. Release the **TARGET RESET** button and decrease the voltage, the **OUTPUT** LED will extinguish. If desired, repeat the test using V2.

6. ***Sync Check Time Delay Test***: Apply Nominal Voltage to V1 and V2, and establish a phase angle difference of more than **PA** +5°. With the output contacts connected to a timer, remove the phase angle difference and start timing. The contacts will close after **SD** cycles within ±2 cycles.

7. ***Delta Voltage Test***: Set the Upper and Lower Voltage limits to their maximum and minimum values, respectively. Set V2 to 140 V and V1 to 80 V. Hold the **TARGET RESET** button in and slowly increase the voltage on V1 until Output **Z** LED operates, or the pickup indicator operates on the computer target screen. The voltage difference should be equal to ±0.5 V or ±5%. Release the **TARGET RESET** button, and decrease the voltage, the **OUTPUT** LED will extinguish. If desired, repeat the test using V2 with V1 at 140 volts.

8. ***Delta Frequency Test***: Set V1 and V2 to Nominal Voltage, and set the frequency of V1 to 0.05 Hz lower than Nominal Frequency and V2 at Nominal Frequency. Hold the **TARGET RESET** button in, and slowly increase the frequency of V1 until Output **Z** LED operates, or the pickup indicator operates on the computer target screen. The frequency difference level should be equal to **ΔF** ±0.001 Hz or 5%. Release the **TARGET RESET** button and decrease the frequency, the **OUTPUT** LED will extinguish. If desired, repeat the test using V2 with V1 at Nominal Frequency.

9. ***Dead Volt Limit Test***:

   Dead V1 & Hot V2 Test: Enable Dead V1 & Hot V2 and disable Dead V2 & Hot V1 (if enabled). Set V2 to Nominal Voltage, and V1 to **DVL** +5 V. Hold the **TARGET RESET** button in, and slowly decrease the voltage on V1 until Output **Z** LED operates, or the pickup indicator operates on the computer target screen. The voltage level should be equal to **DVL** ±0.5 V or ±5%. Release the **TARGET RESET** button and increase the voltage level, the **OUTPUT** LED will extinguish.

   Set V1 to Nominal Voltage, and decrease V2 below **DVL** and verify that the function does not operate.

   Dead V2 & Hot V1 Test: Enable Dead V2 & Hot V1 and disable Dead V1 & Hot V2 (if enabled). Set V1 to Nominal Voltage, and V2 to **DVL** +5 V. Hold the **TARGET RESET** button in, and slowly decrease the voltage on V2 until Output **Z** LED operates, or the pickup indicator operates on the computer target screen. The voltage level should be equal to **DVL** ±0.5 V or ±5%. Release the **TARGET RESET** button and increase the voltage level and the **OUTPUT** LED will extinguish.

   Set V2 to Nominal Voltage, and decrease V1 below **DVL**, and verify that the function does not operate.

   Dead V1 and Dead V2 Test: Enable Dead V1 & Dead V2 . Disable Dead V1 & Hot V2 and Dead V2 & Hot V1, if enabled. Set V1 and V2 to **DVL** +5 V. Hold the **TARGET RESET** button in, and slowly decrease the voltage on V1 and V2 until Output **Z** LED operates, or the pickup indicator operates on the computer target screen. The voltage level should be equal to **DVL** ±0.5 V or ±5%. Release the **TARGET RESET** button and increase the voltage level, the **OUTPUT** LED will extinguish.

   Set V1 to Nominal Voltage, decrease V2 below **DVL**, and verify that the function does not operate.

   Set V2 to Nominal Voltage, decrease V1 below **DVL**, and verify that the function does not operate.

10. ***Dead Input Initiate Test***: Select one of the Dead Inputs (**DIN**) and activate it. Repeat step 9, verify that the function operates as in step 9. Deactivate the **DIN** and repeat step 9 once more. Verify that the function does not operate. Disable Dead Input feature when this step is complete.

11. ***Dead Timer Test***: Enable Dead V1 & Dead V2. Disable Dead V1 & Hot V2 and Dead V2 & Hot V1 (if enabled). Set V1 and V2 to **DVL** +5 V. With output contacts connected to a timer, remove V1 and V2 and start timing. The contacts will close within ±2 cycles.

12. If testing is complete, enable any functions disabled for this test. If further testing is desired, check the proper functions to disable for the next test and continue from this point.

27 Phase Undervoltage, 3-Phase (#1 or #2)

VOLTAGE INPUTS:	Configuration V1			
CURRENT INPUTS:	None			
TEST SETTINGS:	Pickup *(*Of Nominal Voltage*)	P	%	(4 to 100)*
	Time Delay	D	Cycles	(1 to 8160)
	Programmed Outputs	Z	OUT	(1 or 2)
	Function 27 (#1 or #2) (see Note, below)	Disable		
	Functions 25, 60FL, 79	Disable		

■ **NOTE**: If 27 #1 and 27 #2 have different pickup settings, it would be efficient to disable the one with the higher setting first and test the lower setting operation. The higher setting operation could then be tested without disabling the lower setting.

1. Disable functions as shown. See Section 3.2, Setpoints and Time Settings, for procedure.
2. Confirm settings to be tested.
3. Connect inputs in Configuration V1 designated above. See Section 5.1, Equipment/Test Setup for configuration. Set at Nominal Voltage (see Table A-3, System Setup Record Form).
4. ***Pickup Test***: Hold the **TARGET/OUTPUT RESET** pushbutton in and slowly decrease the input voltage on phase A until **PHASE UV 27** LED light illuminates (or the pickup indicator operates on the Function Status screen). The voltage level should be equal to **P** ±0.5 V or ±0.5 %. Release the **TARGET/OUTPUT RESET** pushbutton and increase the input to the nominal voltage. Press **TARGET/OUTPUT RESET** pushbutton to remove targets.
5. ***Time Test***: With output contacts **(Z)** connected to stop the timer, apply approximately (**P** – 5) % and start timing. The contacts will close after **D** cycles within +20 cycles (RMS), or ±2 cycles (DFT).
6. Test phases B and C (or AB, BC in case of Line-Line VT configuration) by repeating Steps 4 and 5.
7. If testing is complete, enable any functions disabled for this test. If other tests are to be completed, check the proper functions to disable for the next test and proceed from this configuration.

27G Ground Undervoltage

VOLTAGE INPUTS:	Configuration V3			
CURRENT INPUTS:	None			
TEST SETTINGS:	Pickup *(*Of Nominal Voltage*)	P	%	(4 to 100)*
	Time Delay	D	Cycles	(1 to 8160)
	Programmed Outputs	Z	OUT	(1 or 2)
	Functions 25, 59G	Disable		

1. Disable functions as shown. See Section 3.2, Setpoints and Time Settings, for procedure.
2. Confirm settings to be tested.
3. Connect voltage input to V_G, terminals 13 & 14. Set at 105% of Pickup **P**.
4. ***Pickup Test***: Hold the **TARGET/OUTPUT RESET** pushbutton in and slowly decrease the neutral voltage until **GROUND UV 27G** LED light illuminates or the pickup indicator operates on the Function Status screen. The voltage level should be equal to **P** ±0.5 V or ±0.5 %. Release the **TARGET/OUTPUT RESET** pushbutton and increase the input to the nominal voltage. Press **TARGET/OUTPUT RESET** pushbutton to remove targets.
5. ***Time Test***: With output contacts **(Z)** connected to the timer, apply approximately (**P** – 1) % and start timing. The contacts will close after **D** cycles within ±2 cycles.
6. If testing is complete, enable any functions disabled for this test. If other tests are to be completed, check the proper functions to disable for the next test and proceed from this configuration.

32 Directional Power, 3-Phase (#1 or #2) L-L/L-G/L-L

VOLTAGE INPUTS:	Configuration V1			
CURRENT INPUTS:	Configuration C1			
TEST SETTINGS:	Pickup	P	PU	(–3.00 to +3.00)
	Time Delay	D	Cycles	(1 to 8160)
	Programmed Outputs	Z	OUT	(1 or 2)
	Function 32 (#1 or #2) Functions 40, 79	Disable Disable		

■ **NOTE**: It would be efficient to disable the function with the lower pickup setting first and test the higher setting operation. Since the lower setting operation can be tested without disabling the higher setting, the 32 functions will be enabled when the tests are complete.

1. Disable functions as shown. See Section 3.2, Setpoints and Time Settings, for procedure.
2. Confirm settings to be tested.
3. Connect inputs in Configuration V1 and C1 designated above. See Section 5.1, Equipment/Test Setup for configurations.
4. The power in PU can be calculated as follows:

$$P \text{ in PU} = \frac{V}{V_{nom}} \times \frac{I}{I_{nom}} \times \cos\theta$$

   Where V is line-to-ground (L-G) or line-line (L-L) applied voltage as appropriate, I is the line current, and θ is the angle between V_A (L-G) and I_A.
5. The level of current at which operation is to be expected for an individual power setting is as follows: Multiply the PU pickup value (**P** above) by the **Nominal Current** (see Table A-3, System Setup Record Form).
6. Set the three phase voltages to the **Nominal Voltage** (see Table A-3, System Setup Record Form).
7. ***Pickup Test – Over Power***: Press and hold the **TARGET/OUTPUT RESET** pushbutton and slowly increase the three phase currents (*for negative or reverse power flow direction, the phase angle of the phase currents are set at 180 degrees from the respective phase voltages*). Increase the currents until the **DIRECTIONAL PWR 32** LED light illuminates or the pickup indicator operates on the Function Status screen. The level of operation will be equal to that calculated in step 5, ±0.02 PU or ±2%.
8. ***Pickup Test – Under Power***: Press and hold the **TARGET/OUTPUT RESET** pushbutton. *For negative or reverse power flow direction, the phase angle of the phase currents are set at 180 degrees from the respective phase voltages.* Start with a current calculated in Step 5, ±10%, then slowly decrease the current until the **DIRECTIONAL PWR 32** LED light illuminates or the pickup indicator operates on the Function Status screen.
9. Release the **TARGET/OUTPUT RESET** pushbutton and decrease the currents. Press **TARGET/ OUTPUT RESET** pushbutton to remove targets.
10. ***Time Test***: With output contacts **(Z)** connected to stop the timer, apply approximately 110% of the pickup current and start timing. The contacts will close after **D** cycles within ±2 cycles.
11. If testing is complete, enable any functions disabled for this test. If other tests are to be completed, check the proper functions to disable for the next test and proceed from this configuration.

■ **NOTE**: The above test assumes line-to-ground VT configuration. The test can also be conducted for line-to-line configuration with 30° phase shift in voltage signals. When L-G to L-L configuration is used, V in step 4 should be replaced with $\sqrt{3}$ V.

32 Directional Power (#1 or #2) Line-Ground

VOLTAGE INPUTS:	Configuration V1			
CURRENT INPUTS:	Configuration C1			
TEST SETTINGS:	Pickup	P	PU	(–3.00 to +3.00)
	Time Delay	D	Cycles	(1 to 8160)
	Programmed Outputs	Z	OUT	(1 or 2)
	Function 32 (#1 or #2)	Disable		
	Function 60FL	Disable		
	Functions 40, 79	Disable		

■ **NOTE**: It would be efficient to disable the function with the lower pickup setting first and test the higher setting operation. Since the lower setting operation can be tested without disabling the higher setting, the 32 functions will be enabled when the tests are complete.

1. Disable functions as shown. See Section 3.2, Setpoints and Time Settings, for procedure.
2. Confirm settings to be tested.
3. Connect inputs in Configuration V1 and C1 designated above. See Section 5.1, Equipment/Test Setup for configurations.
4. The level of current at which operation is to be expected for an individual power setting is as follows: Multiply the PU pickup value (**P** above) by the **Nominal Current** (see Table A-3, System Setup Record Form).
5. ***Three-Phase Detect Pickup Test***:
   a. Enable Three-Phase Detection.
   b. Set the three phase voltages to the **Nominal Voltage** (see Table A-3, System Setup Record Form).

■ **NOTE**: For negative or reverse power flow direction, the phase angle of these currents are set at 180 degrees from their respective phase voltages.

   c. Hold the **TARGET RESET** button in and slowly increase the three-phase current until the **DIRECTIONAL PWR 32** LED light illuminates, or the pickup indicator operates on the **Function Status** screen. The level at which operation occurs will be equal to that calculated in Step 4, ±0.02 PU or ±2%.

6. ***Single-Phase Pickup Test***: Disable Three-Phase Detection. Repeat Step #5, using only one voltage and one current of the same phase.
7. Release the **TARGET RESET** pushbutton and decrease the currents. The **OUTPUT** LEDs will extinguish. Press **TARGET RESET** pushbutton to remove targets.
8. ***Time Test***:
   a. Connect the output contacts **(Z)** to the timer.
   b. Apply approximately 110% of the pickup current and start timing. The contacts will close after **D** cycles within +16 cycles, ±1%.
9. If testing is complete, enable any functions disabled for this test. If other tests are to be completed, check the proper functions to disable for the next test and proceed from this configuration.

40 Loss-of-Field (#1 or #2)

VOLTAGE INPUTS: Configuration V1
CURRENT INPUTS: Configuration C1
TEST SETTINGS:

Diameter	P	PU	(0.01 to 3.00)
Offset	O	PU	(–2.00 to 2.00)
Time Delay	D	cycles	(1 to 8160)
Voltage Control (**of Nominal Voltage*)		%*	(4 to 100)*
Programmed Outputs	Z	OUT	(1 or 2)
Functions 27, 32, 60FL, 79	Disable		
Function 40 Volt Control	Disable		
Function 40 (#1 or #2)	Disable		
VT Configuration	Line-Ground		

■ **NOTE**: It would be efficient to disable the function with the higher "reach" (diameter minus offset) setting first (lower current) and test the lower "reach" setting operation. Since the higher setting operation can be tested without disabling the lower setting, the 40 functions will be enabled when the tests are complete.

1. Disable functions as shown. See Section 3.2, Setpoints and Time Settings, for procedure.
2. Confirm settings to be tested.
3. Connect inputs in Configuration V1 and C1 designated above. See Section 5.1, Equipment/Test Setup for configurations.
4. The level of current at which operation is to be expected for an individual setting is as follows:
   a. Define "reach" as $\mathbf{R_{PU} = (P_{PU} - O_{PU})}$ where $\mathbf{O_{PU}}$ is essentially negative.

   $$R_{sec} = R_{PU}\left(\frac{V_N{}^*}{I_N}\right),\ O_{sec} = O_{PU}\left(\frac{V_N{}^*}{I_N}\right)$$

   **for L-L and L-G-to-L-L VT configuration, use $V_N/\sqrt{3}$*

   b. Define "trip current" as $\mathbf{I = (Applied\ Voltage \div R_{sec})}$. The voltage level may be selected based on the desired test current level.
   c. Define "offset current" as $\mathbf{IO = (Applied\ Voltage \div O_{sec})}$.
5. Set the three-phase voltages V_A, V_B, and V_C to the **Applied Voltage** value from step 4, and set the phase angle between the voltage and current inputs to 90° (current leading voltage).
6. ***Pickup Test***: Press and hold the **TARGET/OUTPUT RESET** pushbutton and slowly increase the three-phase currents until the appropriate **LOSS OF FIELD 40** LED light illuminates or the pickup indicator operates on the Function Status screen. The level will be equal to "**I**" calculated in step 4 with the resulting impedance within ±0.01 PU or ±5%. *If the offset is negative, continue to increase the current until the LED extinguishes. The level will be equal to "**IO**" calculated in step 4 with the resulting offset impedance within ±0.01 PU or ±5%.*
7. Release **TARGET/OUTPUT RESET** pushbutton and decrease the currents. Press **TARGET/OUTPUT RESET** pushbutton to reset targets.

8. ***Time Test***: Set the three-phase voltages V_A, V_B, and V_C to the **Selected Voltage** value from step 4, and set the phase angle between the voltage and current inputs to 90° (current leading voltage). With output contacts (**Z**) connected to stop the timer, apply **I** + 10% Amps and start timing. Contacts will close within **D** ±2 cycles.

9. If testing is complete, enable any functions disabled for this test. If other tests are to be completed, check the proper functions to disable for the next test and proceed from this configuration.

■ **NOTE**: The above test assumes line-to-ground VT configuration. The test can also be conducted for line-to-line configuration with 30° phase shift in voltage signals.

(For proper testing, use I ≤3 x CT rating)

46 Negative Sequence Overcurrent Definite Time (Current Unbalance)

VOLTAGE INPUTS:	None			
CURRENT INPUTS:	Configuration C1			
TEST SETTINGS:	Pickup (**of Nominal Current*)	P	%*	(3 to 300)*
	Time Delay	D	cycles	(1 to 8160)
	Programmed Outputs	Z	OUT	(1 or 2)
	Functions 27, 46 Inv Time	Disable		

1. Disable functions as shown. See Section 3.2, Setpoints and Time Settings, for procedure.
2. Confirm settings to be tested.
3. Connect inputs in Configuration C1 designated above. The phase angles of currents should be set as $I_A = \angle 0°$, $I_B = \angle 120°$, $I_C = \angle -120°$
4. The level of current at which operation is to be expected for an individual setting is: Pickup current = (**P**% ÷ 100) x (**Nominal Current**). See Table A-3, System Setup Record Form.
5. ***Pickup Test***: Press and hold the **TARGET/OUTPUT RESET** pushbutton and slowly increase the three-phase currents until the **CUR UNBALANCE 46** LED illuminates or the pickup indicator operates on the Function Status screen. The level will be equal to pickup current calculated in step 4 ±0.5% or ±0.1 A for 5 A (±0.02 A or ±0.5% for 1 A units).
6. Release **TARGET/OUTPUT RESET** pushbutton and decrease the currents. Press **TARGET/ OUTPUT RESET** pushbutton to remove targets.
7. ***Time Test***: With output contacts (Z) connected to stop the timer, apply current of at least (**1.1 x pickup**) amps and start timing. The contacts will close after **D** cycles within ±2 cycles.
8. If testing is complete, enable any functions disabled for this test. If other tests are to be completed, check the proper functions to disable for the next test and proceed from this configuration.

46 Negative Sequence Overcurrent Inverse Time (Current Unbalance) – Generator Protection (Curve I_2^2t = K, or Curve D-9)

VOLTAGE INPUTS:	None			
CURRENT INPUTS:	Configuration C1			
TEST SETTINGS:	Pickup (**of Nominal Current*)	P	%	(3 to 100)*
	Time Dial Setting (Negative Sequence Overcurrent Inverse Time Curve 9)	K		(1 to 95)
	Definite Maximum	D	cycles	(600 to 65,500)
	Programmed Outputs	Z	OUT	(1 or 2)
	Function 46 Definite Time	Disable		
	Functions 27, 79	Disable		

1. Disable functions as shown. See Section 3.2, Setpoints and Time Settings, for procedure.
2. Confirm settings to be tested.
3. Connect inputs in Configuration C1 designated above. The phase angles of currents should be set as $I_A = \angle 0°$, $I_B = \angle 120°$, $I_C = \angle -120°$.
4. The current pickup level at a percentage setting is: Pickup current = (**P**% ÷ 100) x **Nominal Current** (see Table A-3, System Setup Record Form).
5. Test levels may be chosen at any percentages of Nominal Current which are a minimum of 5% higher than the pickup percentage, **P%**. (Suggest 4 or 5 test levels chosen and calculated in amps.)
6. ***Time Test***: With output contacts (**Z**) connected to stop the timer, apply currents equal to the chosen test levels calculated in step 5 and start timing. The operating time will be as read from Figure D-9, I_2^2t = K, Negative Sequence Inverse Time Curves, negative sequence current in % of Nominal Current and appropriate **K** (Time Dial) setting, or the maximum trip time (whichever is faster) ±3 cycles or ±10%. Repeat this step for all test levels chosen.
7. ***Reset Time Test***: If it is desired to test the reset time, begin timing immediately when the input current is reduced below the pickup value. Holding the **TARGET/OUTPUT RESET** pushbutton in, stop timing when the **CUR UNBALANCE 46** LED extinguishes. The time should be approximately 4 minutes.
8. If testing is complete, enable any functions disabled for this test. If other tests are to be completed, check the proper functions to disable for the next test and proceed from this point.

■ **NOTE**: If retesting is required, the unit should be powered down or wait 4 minutes before the next test to assure resetting of the timer. (For proper testing, use I ≤3 x CT rating)

46 Negative Sequence Overcurrent Inverse Time (Current Unbalance) – Intertie Protection

VOLTAGE INPUTS:	None			
CURRENT INPUTS:	Configuration C1			
TEST SETTINGS:	Pickup (**of Nominal Current*)	P	%	(10 to 100)*
	Standard Inverse Time Curves[1]:			
	Curve	C		(1 to 4)
	Time Dial	TD		(0.5 to 11.0)
	IEC Inverse Time Curves[1]:			
	IEC Curve	C		(5 to 8)
	IEC Time Dial	TD		(0.05 to 1.10)
	Programmed Outputs	Z	OUT	(1 or 2)
	Function 46 Definite Time	Disable		
	Functions 27, 79	Disable		

1. Disable functions as shown. See Section 3.2, Setpoints and Time Settings, for procedure.
2. Confirm settings to be tested.
3. Connect inputs in Configuration C1 designated above. The phase angles of currents should be set as $I_A = \angle 0°$, $I_B = \angle 120°$, $I_C = \angle -120°$.
4. ***IEC Curve Testing***: Test current level may be chosen as a multiple of any level within the Pickup (**P**) range. Calculate the operating time for the applied current and appropriate Time Dial (**TD**) setting from the table below. Choose 4 or 5 test levels and calculate the operating times for each.

IEC Class A Standard Inverse	**IEC Class B** Very Inverse	**IEC Class C** Extremely Inverse	**IEC Class D** Long Time Inverse
$t = TD \times \left[\frac{0.14}{M^{0.02} - 1}\right]$	$t = TD \times \left[\frac{13.5}{M - 1}\right]$	$t = TD \times \left[\frac{80}{M^2 - 1}\right]$	$t = TD \times \left[\frac{120}{M - 1}\right]$
Curve 5	***Curve 6***	***Curve 7***	***Curve 8***

t = time in seconds, TD = Time Dial setting, M = current in multiples of pickup

Standard Curve Testing: The operating time will be read from Appendix D, Inverse Time Curves, for the applied current and appropriate Time Dial (**TD**) setting.

5. ***Time Test***: With output contacts (**Z**) connected to stop the timer, apply currents equal to the multiple of the Inverse Time Pickup (**P**) chosen in Step 4, and start timing. The operating time will be as calculated in Step 4, ±3 cycles or ±10% (for M=2 and above).
6. If testing is complete, enable any functions disabled for this test. If other tests are to be completed, check the proper functions to disable for the next test and proceed from this point.

■ **NOTE**: For proper testing, use current below 3 times CT rating.

[1] Either a Standard Curve or an IEC Curve must be selected

47 Negative Sequence Overvoltage (Voltage Unbalance) (#1 or #2)

VOLTAGE INPUTS:	Configuration V1			
CURRENT INPUTS:	None			
TEST SETTINGS:	Pickup (**of Nominal Voltage*)	P	%	(4 to 100)*
	Time Delay	D	Cycles	(1 to 8160)
	Programmed Outputs	Z	Output	(1 or 2)
	Function 47 (#1 or #2)	Disable		
	Functions 25, 27, 60FL, 79	Disable		

■ **NOTE**: If 47 #1 and 47 #2 have different pickup settings, it would be efficient to disable the one with the lower setting first and test the higher setting operation. The lower setting operation could then be tested without disabling the higher setting.

1. Disable functions as shown. Refer to Section 3.2, Setpoints and Time Settings, for procedure.
2. Confirm settings to be tested.
3. Connect inputs in configuration V1 and apply the voltage phase angles as follows:
   a. Line-Ground or Line-Ground to Line-Line: $V_A = \angle 0°$, $V_B = \angle 120°$, $V_C = \angle -120°$
   b. Line-to-Line: $V_{AB} = \angle 0°$, $V_{BC} = \angle 120°$
4. ***Pickup Test:*** Apply 3-phase voltage 5% below pickup **(P)**. Hold the **TARGET/OUTPUT RESET** pushbutton in and slowly increase the voltage applied until the **VOLT UNBALANCE 47** LED illuminates or the pickup indicator operates on the Function Status screen. The level should be equal to **P**% ±0.5% or ±0.5 V. Release the **TARGET/OUTPUT RESET** pushbutton and decrease applied voltage. Press the **TARGET/OUTPUT RESET** pushbutton again to remove targets.
5. ***Time Test***: Apply voltage 10% less than pickup (**P**) to all three phases. With output contacts connected to a timer, apply **P** + 10% and start timing. The contacts will close after **D** cycles, within ±2 cycles.
6. If testing is complete, enable any functions disabled for this test. If other tests are to be completed, check the proper functions to disable for the next test and proceed from this point.

51N Inverse Time Residual Overcurrent

VOLTAGE INPUTS:	None		
CURRENT INPUTS:	C1 (modified)		
TEST SETTINGS:	51N Pickup	P Amps	(0.5 to 6)
	1 Amp CT Rating		(0.1 to 1.2)
	Standard Inverse Time Curves:[1]		
	Curve	C	(1-4)
	Time Dial	TD	(.5 to 11)
	IEC Inverse Time Curves:[1] (inverse/very inverse/extremely inverse/long time inverse)		
	IEC Curve	C	(5 to 8)
	IEC Time Dial	TD	(.05 to 1.1)
	Programmed Outputs	Z OUT	(1 or 2)

[1]*Either a standard curve or an IEC curve must be selected.*

1. Disable functions as shown. Refer to Section 3.2, Setpoints and Time Settings, for procedures.
2. Confirm settings to be tested.
3. Connect current inputs in Configuration C1 (modified) designated previously. See Section 5.1, Equipment/Test Setup for configuration. The modification to C1 is to set all three currents to phase angles 0°. In this configuration, the applied value of I_N is equal to the sum of the 3-phase currents $I_N=(I_a + I_b + I_c)$.
4. Refer to Appendix D . Calculate test times for levels represented on the graphs. Choose 4 or 5 test levels and calculate test times for each. For IEC curves, the following formulas can be used:

IEC Class A Standard Inverse	**IEC Class B** Very Inverse	**IEC Class C** Extremely Inverse	**IEC Class D** Long Time Inverse
$t=TD \times \left[\frac{0.14}{M^{0.02} - 1}\right]$	$t=TD \times \left[\frac{13.5}{M - 1}\right]$	$t=TD \times \left[\frac{80}{M^2 - 1}\right]$	$t=TD \times \left[\frac{120}{M - 1}\right]$
Curve 5	***Curve 6***	***Curve 7***	***Curve 8***

t = time in seconds TD = Time Dial setting M = current in multiples of pickup

5. ***Time Test**:* With output contacts connected to the timer, apply input current used in calculations from step 4 and start timing. The operating time will be ±3 cycles or ±10%* of calculated time (refer to Appendix D, **Inverse Time Curves**). Repeat this step for each test level chosen. The tested points verify the operation of this function.
6. If testing is complete, enable any functions disabled for this test. If further testing is desired, check the proper functions to disable for the next test and continue from this point.

*The specified timing accuracy is applicable for currents above three times the pickup value.

51V Inverse Time Overcurrent with Voltage Control or Voltage Restraint

VOLTAGE INPUTS:	V1			
CURRENT INPUTS:	C1			
TEST SETTINGS:	Pickup	P	Amps	(0.50 to 12.00)
	1 Amp CT Rating			(0.10 to 2.40)
	Standard Inverse Time Curves:[1]			
	Curve	C		(1 to 4)
	Time Dial	TD		(0.5 to 11.0)
	IEC Inverse Time Curves:[1]			
	IEC Curve	C		(5 to 8)
	IEC Time Dial	TD		(0.05 to 1.10)
	Programmed Outputs	Z	Output	(1 or 2)

[1]Either a standard curve or an IEC curve must be selected.

1. Disable functions as shown. Refer to Section 3.2, Setpoints and Time Settings, for procedures.
2. Confirm settings to be tested.
3. Connect current inputs in Configuration C1 designated previously. See Section 5.1, Equipment/ Test Setup for configuration.
4. Refer to Appendix D. Calculate test times for levels represented on the graphs. It is suggested that 4 or 5 test levels be chosen.
5. ***Time Test***: With output contacts connected to the timer, apply current used in calculations from step 4 and start timing. The operating time will be ±3 cycles or ±10%* of calculated time (for M=2 and above). Repeat this step for each test level chosen. The tested points verify the operation of this function. The following equations can be used for IEC curves:

IEC Class A Standard Inverse	**IEC Class B** Very Inverse	**IEC Class C** Extremely Inverse	**IEC Class D** Long Time Inverse
$t = TD \times \left[\frac{0.14}{M^{0.02} - 1}\right]$	$t = TD \times \left[\frac{13.5}{M - 1}\right]$	$t = TD \times \left[\frac{80}{M^{2} - 1}\right]$	$t = TD \times \left[\frac{120}{M - 1}\right]$
Curve 5	***Curve 6***	***Curve 7***	***Curve 8***

t = time in seconds TD = Time Dial setting M = current in multiples of pickup

6. ***Voltage Control Test***: Input voltages at least 5% under the Voltage Control setting V.
   a. With output contacts connected to the timer, apply current equal to the chosen test level calculated in step 4 on phase A, and start timing. The operating time will be as read from the appropriate Inverse Curve Family and **K** (Time Dial) setting. Repeat this step for all test levels chosen. The tested points verify the operating times of the function.
   b. The input voltage may be increased over the Voltage Control setting by at least 0.5% or ±0.5 V, and the function will drop out.
7. ***Voltage Restraint Test*** (see Figure 3-44): Input Nominal Voltages and test as in step 6 above (same current input values). Repeat step 6 above with reduced input voltage values and current reduced by an equivalent percentage as the voltage reduction. This test should be conducted with balanced 3-phase voltages.
8. If testing is complete, enable any functions disabled for this test. If further testing is desired, check the proper functions to disable for the next test and continue from this point.

*The specified timing accuracy is applicable for currents above three times the pickup value.

59 Phase Overvoltage, 3-Phase (#1 or #2)

VOLTAGE INPUTS:	Configuration V1			
CURRENT INPUTS:	None			
TEST SETTINGS:	Pickup (**of Nominal Voltage*)	P	%	(100 to 150)*
	Time Delay	D	Cycles	(1 to 8160)
	Programmed Outputs	Z	OUT	(1 or 2)
	Functions 25, 59I, 60FL, 79 Function 59 (#1 or #2) (see Note, below)	Disable Disable		

■ **NOTE**: If 59 #1 and 59 #2 have different pickup settings, it would be efficient to disable the one with the lower setting first and test the higher setting operation. The lower setting operation could then be tested without disabling the higher setting.

1. Disable functions as shown. See Section 3.2, Setpoints and Time Settings, for procedure.
2. Confirm settings to be tested.
3. Connect inputs in Configuration V1 designated above. See Section 5.1, Equipment /Test Setup for configuration. Set Voltages = Nominal Voltage (see Table A-3, System Setup Record Form).
4. ***Pickup Test***: Press and hold the **TARGET/OUTPUT RESET** pushbutton and slowly increase the input voltage on phase A until **59/59I PHASE OV** LED illuminates or the pickup indicator operates on the Status Function screen. The level should be equal to **P** ±0.5 V or ±0.5%. Release the **TARGET/OUTPUT RESET** pushbutton and decrease the input voltage to nominal voltage. Press **TARGET/OUTPUT RESET** pushbutton to remove targets.
5. ***Time Test***: With output contacts (**Z**) connected to stop the timer, apply (**P**+5) % on phase A and start timing. The contacts will close after **D** cycles within +20 cycles (RMS) or ±2 cycles (DFT).
6. Test phases B and C (or AB and BC for Line-Line VT configurations) by repeating steps 4 and 5.
7. If testing is complete, enable any functions disabled for this test. If other tests are to be completed, check the proper functions to disable for the next test and proceed from this point.

59G Ground Overvoltage

VOLTAGE INPUTS:	Configuration V3			
CURRENT INPUTS:	None			
TEST SETTINGS:	Pickup (**of Nominal Voltage*)	P	%	(4 to 150)*
	Time Delay	D	Cycles	(1 to 8160)
	Programmed Outputs	Z	OUT	(1 or 2)
	Functions 25, 27G	Disable		

1. Disable functions as shown. See Section 3.2, Setpoints and Time Settings, for procedure.
2. Confirm settings to be tested.
3. Connect voltage input to terminals 13 & 14.
4. ***Pickup Test***: Press and hold the **TARGET/OUTPUT RESET** pushbutton in and slowly increase the input neutral voltage until **59G GROUND OV** LED light illuminates or the pickup indicator operates on the Function Status screen. The level should be equal to **P** ±0.5 V or ±0.5%. Release the **TARGET/OUTPUT RESET** pushbutton and decrease the input voltage. Press **TARGET/OUTPUT RESET** pushbutton to remove targets.
5. ***Time Test***: With output contacts (**Z**) connected to stop the timer, apply (**P**+1) % on phase A and start timing. The contacts will close after **D** cycles within ±2 cycles.
6. If testing is complete, enable any functions disabled for this test. If other tests are to be completed, check the proper functions to disable for the next test and proceed from this point.

59I Peak Overvoltage, 3-Phase

VOLTAGE INPUTS:	V1			
CURRENT INPUTS:	None			
TEST SETTINGS:	Pickup (**of Nominal Voltage*)	P	%	(100 to 150)*
	Time Delay	D	Cycles	(1 to 8160)
	Programmed Outputs	Z	Output	(1 or 2)
	Functions 25, 59, 60FL, 79		Disable	

■ **NOTE:** If function 59 settings are greater than the 59I setting being tested, it is not necessary to disable.

1. Disable functions as shown. Refer to Section 3.2, Setpoints and Time Settings, for procedure.
2. Confirm settings to be tested.
3. Connect inputs in Configuration V1 designated above. Refer to Section 5.1, Equipment/Test Setup for configuration. Set voltages to Nominal Voltage (see Table A-3, System Setup Record Form).
4. ***Pickup Test***: Hold the **TARGET/OUTPUT RESET** pushbutton in, and slowly increase the voltage applied to Phase A until the **59/59I PHASE OV** LED illuminates or the pickup indicator operates on the Function Status screen. The level should be equal to **P** ±3 %. Release the **TARGET/ OUTPUT RESET** pushbutton and decrease the input voltage. Press **TARGET/OUTPUT RESET** pushbutton to remove targets. This test may be performed on each phase, if desired.
5. ***Time Test***: With output contacts being connected to the timer, apply (**P**+5) % and start timing. The contacts will close after **D** cycles within ±3 cycles.
6. If testing is complete, enable any functions disabled for this test. If other tests are to be completed, check the proper functions to disable for the next test and proceed from this point.

60FL Fuse Loss

VOLTAGE INPUTS:	Configuration V1			
CURRENT INPUTS:	Configuration C1			
TEST SETTINGS:	Time Delay	D	Cycles	(1 to 8160)
	Programmed Outputs	Z	OUT	
	Functions 27, 79	Disable		
	Functions 47, 59	Disable		

■ **NOTE:** It is necessary for “FL” to be designated as an initiating input (see Section 3.2, Setpoints and Time Settings) before this function can be tested.

1. Disable functions as shown. See Section 3.2, Setpoints and Time Settings, for procedure.
2. Confirm settings to be tested.
3. Connect inputs in Configuration V1 and C1 designated above. See Section 5.1, Equipment/Test Setup for configurations.
4. Adjust the three-phase voltage source to Nominal Voltage (see Table A-3, System Setup Record Form), and the three-phase current source to Nominal Current (see Table A-3).
5. ***Time Test***: With output contacts connected to the timer, remove the A phase voltage input and start timing, and the **60FL FUSE LOSS** LED will illuminate. The operating time will be **D** cycles within ±2 cycles.
6. Reconnect the phase A voltage and press **TARGET/OUTPUT RESET** pushbutton to remove targets.
7. Repeat steps 5 and 6 for phases B and C.
8. If testing is complete, enable any functions disabled for this test. If other tests are to be completed, check the proper functions to disable for the next test and proceed from this configuration.

79 Reconnect Time Delay

VOLTAGE INPUTS:	Configuration V1			
CURRENT INPUTS:	None			
TEST SETTINGS:	Time Delay	D	Cycles	(2 to 65,500)
	Reconnect Initiate	R		(1or 2)
	Programmed Outputs	Z	OUT	(1 or 2)

1. Disable functions shown. See Section 3.2, Setpoints and Time Settings, for procedure.
2. Confirm settings to be tested.
3. Connect inputs in Configuration V1 designated above. See Section 5.1 Equipment/Test Setup for configuration.
4. Adjust the three-phase voltage source to Nominal Voltage (see Table A-3, System Setup Record Form).
5. ***Setup***: Remove the A phase voltage input to cause Function 27 to trip Output **R** (Output **R** will trip after Function 27 times out).
6. ***Time Test***: With output contacts connected to the timer, reapply the A phase voltage input and start timing. The operation time will be **D** cycles within ±2 cycles.
7. Press **TARGET/OUTPUT RESET** pushbutton to remove targets.
8. If testing is complete, enable any functions disabled for this test. If other tests are to be completed, check the proper functions to disable for the next test and proceed from this configuration.

81 Over/Under Frequency (#1, #2, #3, #4)

VOLTAGE INPUTS: Configuration V1

CURRENT INPUTS: None

TEST SETTINGS:

			60 Hz	50 Hz
Pickup	P	Hz	(50 to 67)	(40 to 57)
Time Delay	D	Cycles	(2 to 65,500)	
Programmed Outputs	Z	OUT	(1 or 2)	
Function 25, 79	Disable			

■ **NOTE**: It would be efficient to disable the functions with the settings nearest to nominal frequency first (testing over or underfrequency functions).

1. Disable functions as shown. See Section 3.2, Setpoints and Time Settings, for procedure.
2. Confirm settings to be tested.
3. Connect inputs in Configuration V1 designated above. See Section 5.1, Equipment/Test Setup for configuration.
4. ***Pickup Test***: Set the voltages V_A, V_B, and V_C to Nominal Voltage (see Table A-3, System Setup Record Form) (nominal frequency). For overfrequency testing, hold the **TARGET/OUTPUT RESET** pushbutton in and slowly increase the frequency on the input voltage(s) until the **81 O/U FREQUENCY** LED illuminates or the pickup indicator operates on the Function Status screen. The level will be equal to **P** Hz ±0.03 Hz only if **P** is within 3 Hz of $F_{nom,}$ otherwise, ±0.15 Hz. Return to nominal input frequency. Press **TARGET/OUTPUT RESET** pushbutton to remove targets. For underfrequency testing, decrease the input frequency and return to nominal after operation.
5. ***Time Test***: With output contacts (**Z**) connected to stop the timer, apply (**P** ±0.5) Hz and start timing. The contacts will close after **D** cycles within ±2 cycles or ±0.01%.
6. Complete the testing for all 81 functions by repeating the appropriate steps for each one.
7. If testing is complete, enable any functions disabled for this test. If other tests are to be completed, check the proper functions to disable for the next test and proceed from this point.

A Appendix A

Configuration Record Forms

This Appendix contains photocopy–ready forms for recording the configuration and setting of the M-3410A Intertie/Generator Protection Relay. The forms can be supplied to field service personnel for configuring the relay, and kept on file for future reference.

A copy of the **Relay Configuration Table** (Table A-1) is provided to define and record the blocking inputs and output configuration. For each function; check the **D** (disabled) column or check the output contacts *t*o be operated by the function, and check the inputs designated to block the function operation.

Table A-2, Communication Data & Unit Setup Record Form reproduces the Communication setup menus. This form records definition of the parameters necessary for communication with the relay, as well as access codes.

Table A-3, System Setup Record Form, allows recording of the specific relay system parameters.

Table A-4, Setpoints and Settings Record Form allows recording of the specific values entered for each enabled setpoint or function. The form follows the main menu selections of the relay.

FUNCTION		D	OUTPUTS			INPUTS	
			2	1	FL	2	1
25							
27	1						
	2						
27G							
32	1						
	2						
40	1						
	2						
46	DEF						
	INV						
47	1						
	2						
51N							
51V							
59	1						
	2						
59G							
59I							
60FL							
79							
81	1						
	2						
	3						
	4						

Check each box applicable : ✓ (See page A-1 for information on using this table.)

D Column = Function Disabled.

OUTPUTS Columns = Designated function output(s)

FL Column = Function blocked by fuse loss.

INPUTS Columns = Designated function blocking input(s)

Table A-1 Relay Configuration Table

PC COM1 Setup

Baud Rate	❑ 300	❑ 600	❑ 1200	
	❑ 2400	❑ 4800	❑ 9600	❑ 19200
Parity	❑ None	❑ Odd	❑ Even	
Stop Bits	❑ 1	❑ 2		

PC COM2 Setup

Baud Rate	❑ 300	❑ 600	❑ 1200	
	❑ 2400	❑ 4800	❑ 9600	❑ 19200
Parity	❑ None	❑ Odd	❑ Even	
Stop Bits	❑ 1	❑ 2		

PC COM3 Setup

Baud Rate	❑ 300	❑ 600	❑ 1200	
	❑ 2400	❑ 4800	❑ 9600	❑ 19200
Parity	❑ None	❑ Odd	❑ Even	
Stop Bits	❑ 1	❑ 2		

Communication Address

Relay Com Access Code (_____)
Default 9999 until changed by operator.

Relay Communication Address 1,2,3... _____

Table A-2 Communication Data & Unit Setup Record Form

Relay Setup

Nominal Frequency	❑ 60 Hz	❑ 50 Hz	
CT Secondary Rating	❑ 5 A	❑ 1 A	
Nominal Voltage	50 to 500 Volts		(_____)
Nominal Current	0.5 to 6.0 Amps		(_____)
Delta-Y Transform	❑ Enable	❑ Disable	
Input Active State #1	❑ Open	❑ Close	
Input Active State #2	❑ Open	❑ Close	
Output Contact Mode #1	❑ Normal	❑ Latching	
Output Contact Mode #2	❑ Normal	❑ Latching	
VT Configuration	❑ L-G	❑ L-L	❑ L-G to L-L
59/27 Magnitude Select	❑ RMS	❑ DFT	
Phase Rotation	❑ ABC	❑ ACB	
Output Relay #1	❑ De-energize to Actuate (Failsafe)	❑ Energize to Actuate	
Output Relay #2	❑ De-energize to Actuate (Failsafe)	❑ Energize to Actuate	
VT Phase Ratio	1.0 to 6550.0		(_____) :1
CT Phase Ratio	1 to 65500		(_____) :1
VT_{Sync}/V_G Ratio	1.0 to 6550.0		(_____) :1
Relay Out #1 Seal-In Time	2 to 8160 Cycles		(_____)
Relay Out #2 Seal-In Time	2 to 8160 Cycles		(_____)
OK LED Flash	❑ Enable	❑ Disable	

User Logo: _____

Table A-3 System Setup Record Form

(25) Sync-Check

Phase Angle Window	0° to 90°	(_____)
Upper Voltage Limit	100.0 to 120.0%	(_____)
Lower Voltage Limit	70.0 to 100.0%	(_____)
Sync Check Delay	1 to 8160 Cycles	(_____)
Dead Voltage Limit	0.0 to 50.0%	(_____)
Dead Time Delay	1 to 8160 Cycles	(_____)
Delta Voltage	1.0 to 50.0%	(_____)
❒ Enable ❒ Disable		
Delta Frequency	0.001 to 0.500 Hz	(_____)
❒ Enable ❒ Disable		

Dead V1 & Hot V2 ❒

Hot V1 & Dead V2 ❒

Dead V1 & Dead V2 ❒

Supervised by Function 79 ❑

Dead Input Initiate ❒ #2 ❒ #1

Phase Selection ❒ AB ❒ BC

Outputs ❒ #2 ❒ #1

Blocking Inputs ❒ FL ❒ #2 ❒ #1

(27) Undervoltage

#1 Pickup	4.0 to 100.0%*	(_____)
#1 Delay	1 to 8160 Cycles	(_____)
#1 Outputs	❒ #2 ❒ #1	
#1 Blocking Inputs	❒ FL ❒ #2 ❒ #1	
#2 Pickup	4.0 to 100.0%*	(_____)
#2 Delay	1 to 8160 Cycles	(_____)
#2 Outputs	❒ #2 ❒ #1	
#2 Blocking Inputs	❒ FL ❒ #2 ❒ #1	

**Of Nominal Voltage.*

Table A-4 Relay Setpoints and Settings Record Form (page 1 of 8)

(27G) Ground Undervoltage

Pickup	4.0 to 100.0%*			(_____)
Delay	1 to 8160 Cycles			(_____)
Outputs		❒ #2	❒ #1	
Blocking Inputs	❒ FL	❒ #2	❒ #1	

**Of Nominal Voltage.*

(32) Reverse/Forward Power

#1 Pickup	–3.00 to +3.00 PU			(_____)
#1 Delay	1 to 8160 Cycles			(_____)
Underpower	❑			
Overpower	❑			
Three-Phase Detection	❑ Enable	❑ Disable		
#1 Outputs		❑ #2	❑ #1	
#1 Blocking Inputs	❑ FL	❑ #2	❑ #1	
#2 Pickup	–3.00 to +3.00 PU			(_____)
#2 Delay	1 to 8160 Cycles			(_____)
Underpower	❑			
Overpower	❑			
Three-Phase Detection	❑ Enable	❑ Disable		
#2 Outputs		❑ #2	❑ #1	
#2 Blocking Inputs	❑ FL	❑ #2	❑ #1	

(40) Loss of Field (dual-zone offset-mho characteristic)

#1 Circle Diameter		0.01 to 3.00 PU		(_____)
#1 Offset		–2.00 to 2.00 PU		(_____)
#1 Delay		1 to 8160 Cycles		(_____)
#1 Voltage Control	❑ Enable	❑ Disable		
#1 Outputs		❑ #2	❑ #1	
#1 Blocking Inputs	❑ FL	❑ #2	❑ #1	
#2 Circle Diameter		0.01 to 3.00 PU		(_____)
#2 Offset		–2.00 to 2.00 PU		(_____)
#2 Delay		1 to 8160 Cycles		(_____)
#2 Voltage Control	❑ Enable	❑ Disable		
#2 Outputs		❑ #1	❑ #2	
#2 Blocking Inputs	❑ FL	❑ #2	❑ #1	
Voltage Control *(of Nominal Voltage)*		4 to 100%		(_____)

Table A-4 Relay Setpoints and Settings Record Form (page 3 of 8)

(46) Negative Sequence Overcurrent

Definite Time

Pickup	3 to 300%	(_____)
Delay	1 to 8160 Cycles	(_____)
Outputs	❑ #2 ❑ #1	
Blocking Inputs	❑ FL ❑ #2 ❑ #1	

Inverse Time (Intertie)

Pickup	3 to 100%	(_____)
Time Dial		
Standard Curves 1–4	0.5 to 11.0	(_____)
IEC Curves 5–8	0.05 to 1.10	(_____)
$I_2^2t=K$		
Max Time	600 to 65500 Cycles	(_____)

Curves

❑ Definite Time ❑ Inverse Time ❑ Very Inverse ❑ Extremely Inverse
❑ IECI ❑ IECVI ❑ IECEI ❑ IECLTI ❑ (I square)*t = K

Outputs	❑ #2 ❑ #1	
Blocking Inputs	❑ FL ❑ #2 ❑ #1	

(47) Negative Sequence Overvoltage

#1 Pickup	4.0 to 100.0%*	(_____)
#1 Delay	1 to 8160 Cycles	(_____)
#1 Outputs	❑ #2 ❑ #1	
#1 Blocking Inputs	❑ FL ❑ #2 ❑ #1	
#2 Pickup	4.0 to 100.0%*	(_____)
#2 Delay	1 to 8160 Cycles	(_____)
#2 Outputs	❑ #2 ❑ #1	
#2 Blocking Inputs	❑ FL ❑ #2 ❑ #1	

**(Of Nominal Voltage)*

Table A-4 Relay Setpoints and Settings Record Form (page 4 of 8)

(51N) Inverse Time Residual Overcurrent

Pickup	0.50 to 6.00 A (0.10 to 1.20 A)	(_____)
Time Dial		
Standard Curves 1-4	0.5 to 11.0	(_____)
IEC Curves 5-8	0.05 to 1.10	(_____)

Curves

❑ Definite Time ❑ Inverse Time ❑ Very Inverse ❑ Extremely Inverse
❑ IECI ❑ IECVI ❑ IECEI ❑ IECLTI

Outputs ❑ #2 ❑ #1

Blocking Inputs ❑ FL ❑ #2 ❑ #1

(51V) Inverse Time Overcurrent, with Voltage Control or Restraint

Pickup	0.50 to 12.00 A (0.10 to 2.40 A)	(_____)
Time Dial (Standard Curves)	0.5 to 11.0	(_____)
Time Dial (IEC Curves)	0.05 to 1.10	(_____)

Curves

❑ Definite Time ❑ Inverse Time ❑ Very Inverse ❑ Extremely Inverse
❑ IECI ❑ IECVI ❑ IECEI ❑ IECLTI

Voltage Control 4.0 to 150.0% (_____)

❑ Disable ❑ Voltage Control ❑ Voltage Restraint

Outputs ❑ #2 ❑ #1

Blocking Inputs ❑ FL ❑ #2 ❑ #1

**Of Nominal Voltage*

Table A-4 Relay Setpoints and Settings Record Form (page 5 of 8)

(59) Overvoltage

#1 Pickup		100.0 to 150.0%*		(_____)
#1 Delay		1 to 8160 Cycles		(_____)
#1 Outputs		❑ #2	❑ #1	
#1 Blocking Inputs	❑ FL	❑ #2	❑ #1	
#2 Pickup		100.0 to 150.0%*		(_____)
#2 Delay		1 to 8160 Cycles		(_____)
#2 Outputs		❑ #2	❑ #1	
#2 Blocking Inputs	❑ FL	❑ #2	❑ #1	

**Of Nominal Voltage*

(59G) Ground Overvoltage

Pickup		4.0 to 150.0%*		(_____)
Delay		1 to 8160 Cycles		(_____)
Outputs		❑ #2	❑ #1	
Blocking Inputs	❑ FL	❑ #2	❑ #1	

**Of Nominal Voltage*

Table A-4 Relay Setpoints and Settings Record Form (page 6 of 8)

(59I) Peak Overvoltage

Pickup		100.00 to 150.00%*		(_____)
Delay		1 to 8160 Cycles		(_____)
Outputs		❑ #2	❑ #1	
Blocking Inputs	❑ FL	❑ #2	❑ #1	

**Of Nominal Voltage*

(60 FL) Fuse-Loss Detection

Delay		1 to 8160 Cycles		(_____)
Input Initiate	❑ FL	❑ #2	❑ #1	
Outputs		❑ #2	❑ #1	
Blocking Inputs	❑ FL	❑ #2	❑ #1	

(79) Reconnect Enable Time Delay

Delay		2 to 65,500 Cycles		(_____)
Reconnect Initiate		❑ #2	❑ #1	
Outputs		❑ #2	❑ #1	
Blocking Inputs	❑ FL	❑ #2	❑ #1	

Table A-4 Relay Setpoints and Settings Record Form (page 7 of 8)

(81) Over/Under Frequency

#1 Pickup		50.00 to 67.00 (40.00 to 57.00*)		(_____)
#1 Delay		2 to 65,500 Cycles		(_____)
#1 Outputs		❑ #2	❑ #1	
#1 Blocking Inputs	❑ FL	❑ #2	❑ #1	
#2 Pickup		50.00 to 67.00 (40.00 to 57.00*)		(_____)
#2 Delay		2 to 65,500 Cycles		(_____)
#2 Outputs		❑ #2	❑ #1	
#2 Blocking Inputs	❑ FL	❑ #2	❑ #1	
#3 Pickup		50.00 to 67.00 (40.00 to 57.00*)		(_____)
#3 Delay		2 to 65,500 Cycles		(_____)
#3 Outputs		❑ #2	❑ #1	
#3 Blocking Inputs	❑ FL	❑ #2	❑ #1	
#4 Pickup		50.00 to 67.00 (40.00 to 57.00*)		(_____)
#4 Delay		2 to 65,500 Cycles		(_____)
#4 Outputs		❑ #2	❑ #1	
#4 Blocking Inputs	❑ FL	❑ #2	❑ #1	

** This range applies to 50 Hz nominal frequency models.*

Table A-4 Relay Setpoints and Settings Record Form (page 8 of 8)

B Appendix B - Communications

The M-3410A Intertie/Generator Protection Relay incorporates two serial ports for intelligent, digital communication with external devices. Equipment such as RTU's, data concentrators, modems, or computers can be interfaced for direct, on-line, real time data acquisition and control.

The M-3810A IPSCom® Communication Software package has been supplied for communication to any IBM compatible computer running under Microsoft® Windows 95/98/NT/2000.

MODBUS communication protocol is implemented in the relay. Only RTU mode of the MODBUS protocol is supported. The following functions are implemented in IPScom using MODBUS protocol:

- Real time monitoring of measured parameters
- Interrogation and modification of setpoints
- Downloading of recorded oscillograph data and sequence of events data
- Reconfiguration of relay functions

For detailed information on IPScom communications, refer to **Chapter 4, Operation**.

Communication Ports

The relay includes both front and rear panel serial COM ports. The front panel port is a 9-pin RS-232 (DB9S) connector configured as DTE (Data Terminal Equipment) per the EIA-232 standard. The rear port can be configured as an RS-232 or RS-485 port. Signals are defined in Table B-1, Communication Port Signals .

Each communication port may be configured to operate at any of the standard baud rates (300, 600, 1200, 2400, 4800, 9600, and 19200). The RS-485 port shares the same baud rate with COM 2 (see Section 2.7, **Circuit Board Switches and Jumpers**).

While the digital communication ports do include some ESD (Electrostatic Discharge) protection circuitry, they are excluded from passing ANSI/IEEE C37.90.1-1989. Beckwith Electric recommends the use of RS-232/485 to fiber optic converters to avoid any question of surge-withstand capability or ground potential rise.

A null modem cable is also shown in Figure B-1, Null Modem Cable: M-0423, if direct connection to a PC (personal computer) is desired.

Circuit		Signal	COM1	COM2
BB	RX	Receive Data	Pin 2	Pin 2
BA	TX	Transmit Data	Pin 3	Pin 3
CA	RTS	Request to Send	Pin 7	Pin 7
CB	CTS	Clear to Send		Pin 8
CD	DTR	Data Terminal Ready	Pin 4	Pin 4
CF	DCD	Data Carrier Detect		Pin 1
AB	GND	Signal Ground	Pin 5	Pin 5

Table B-1 Communication Port Signals

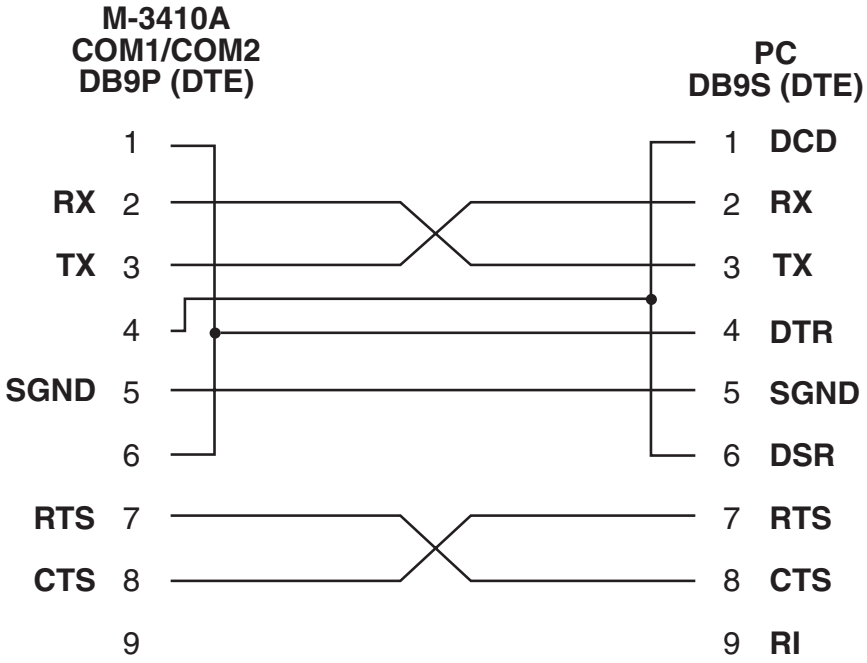

Figure B-1 Null Modem Cable: M-0423

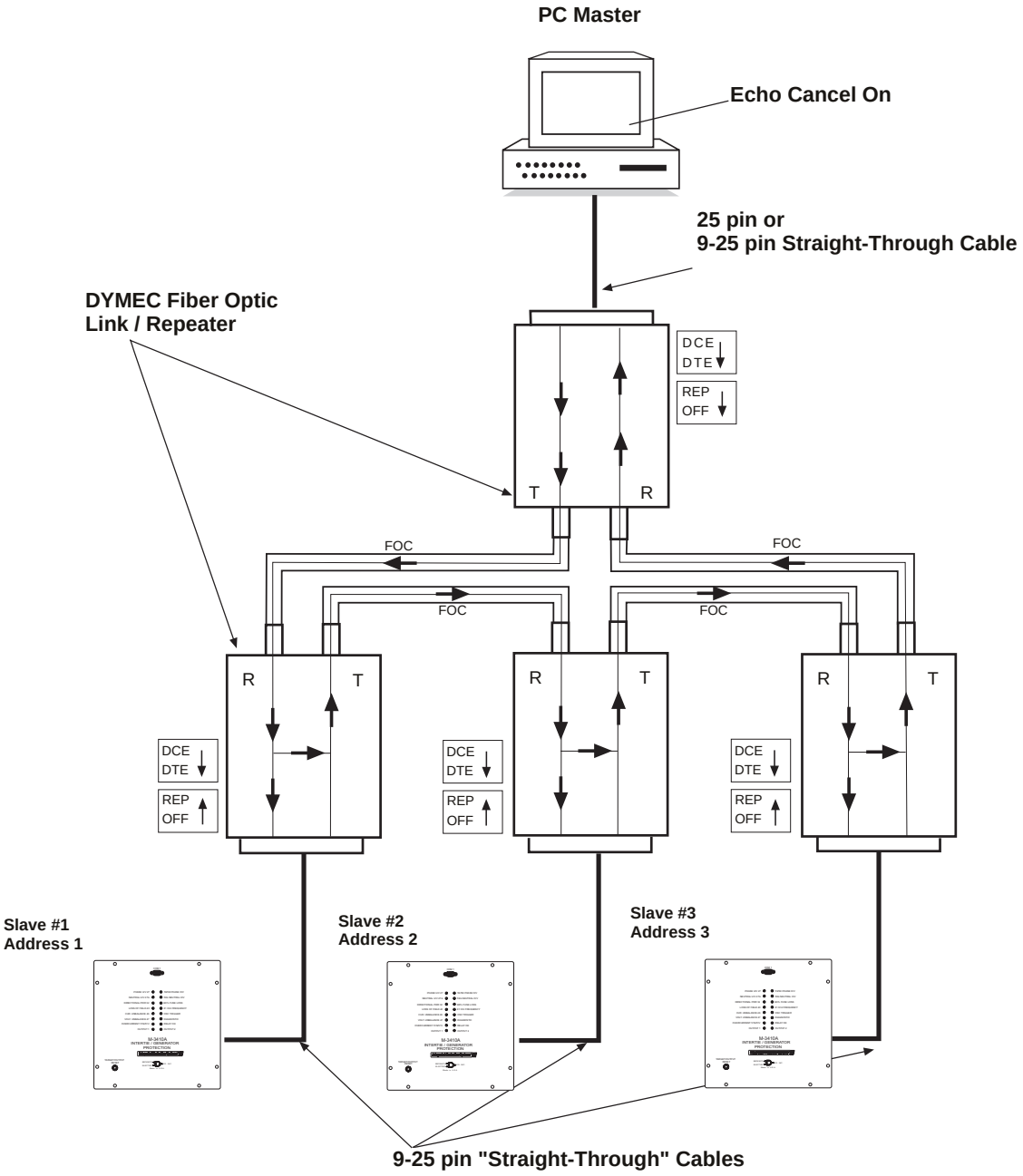

■ **NOTE**: DYMEC Fiber Optic Link/Repeater DCE/DTE selector switches are set to DTE (meaning, connecting to a DTE device) utilizing a straight-through cable.

Figure B-2 RS-232 Fiber Optic Network

RS-485 2-Wire Network

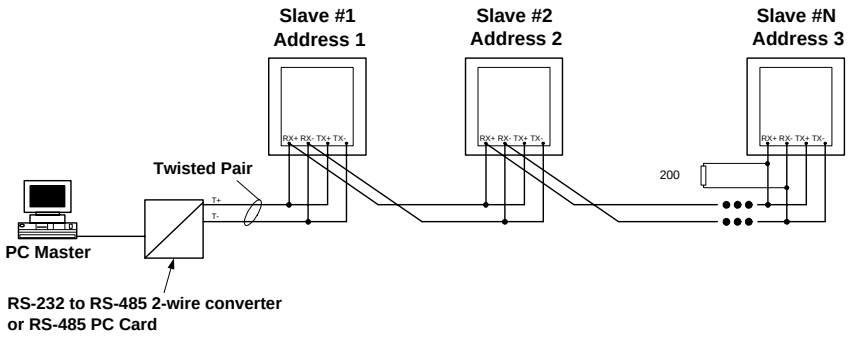

▲ **CAUTION:** Due to the possibility of ground potential difference between units, all units should be mounted in the same rack. If this is not possible, fiber optics with the appropriate converters should be used for isolation.

■ **NOTES**:

1. For 2-wire applications, terminal Tx+ must be jumped to terminal Rx+, and terminal Tx– to terminal Rx–.
2. Each address on the network must be unique. Only the last physical slave on the network should have the termination resistor installed. This may be completed externally or via a jumper internal to the unit. See Section 2.7, Circuit Board Switches and Jumpers.
3. Slave N may be up to 31 relays.
4. The "Echo Cancel" feature should be selected to "ON" in the Communication Dialog Screen (Figure 4.3).

Figure B-3 RS-485 2-Wire Network

RS-485 4-Wire Network

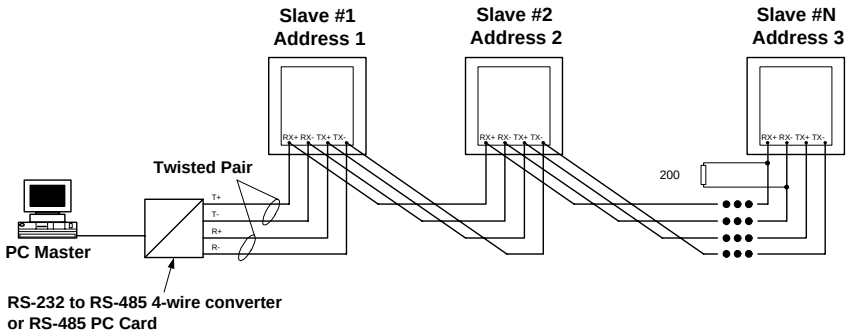

▲ **CAUTION:** Due to the possibility of ground potential difference between units, all units should be mounted in the same rack. If this is not possible, fiber optics with the appropriate converters should be used for isolation.

■ **NOTES**:

1. Each address on the network must be unique. Only the last physical slave on the network should have the termination resistor installed. This may be completed externally or via a jumper internal to the unit. See Section 2.7, Circuit Board Switches and Jumpers.
2. Slave N may be up to 31 relays.

Figure B-4 RS-485 4-Wire Network

C Appendix C – Self-Test Error Codes

Whenever the relay is powered up it conducts a Power On Self Test to determine the operability of all functions. If during the Power On Self Test an error condition is detected, the relay will output the corresponding error code listed below.

Error Code	Description
11	EEPROM write power-up fail
12	EEPROM read back power-up fail
13	EEPROM write calibration checksum fail
14	EEPROM write setpoint checksum fail loss of power
15	EEPROM write setpoint checksum fail loss of battery backed RAM
16	DSP external program RAM1 fail
17	DSP A/D convert fail
18	DSP ground channel fail
19	DSP reference channel fail
21	DSP PGA gain fail
22	DSP program load fail
23	DSP not running run mode code
24	DSP not running secondary boot code
25	EEPROM write verify error
26	Unitialized EEPROM
27	Calibration checksum mismatch warning
28	Setpoint checksum mismatch warning
29	Low battery warning
31	Supply mix PGA running test fail
32	External DSP RAM test fail
33	Values update watchdog fail
34	Abort Error
35	Restart Error
36	Interrupt Error
37	Calibration Running Check Fail

Table C-1 Self-Test Error Codes

Error Code	Description
38	Oscillograph buffer overflow
39	Oscillograph buffer underflow
41	Failure of DSP to calculate calibration phasors
42	Unable to calibrate input gain
43	Unable to calibrate input phase
44	Stack overflow
45	Setpoint write overflow
46	Flash ROM Checksum error
47	DSP Internal RAM error
48	DSP external program RAM 2 error
49	COM1 UART Write Verify error
51	COM2 UART Write Verify error
52	DSP to Microprocessor com error
53	Analog Front-End Voltage Ref fail
54	COM2 Loopback Test error
55	COM3 Loopback Test error
56	Diagnostic Not Available

Table C-1 Self-Test Error Codes (continued)

D Appendix D – Inverse Time Curves

This Appendix contains Inverse Time Curve families for the M-3410A functions which utilize the Inverse Time Overcurrent curves. Table D-1A and D-1B on pages D–2 and D–3 contains a list of the data that characterizes Definite Time, Inverse Time, Very Inverse Time, and Extremely Inverse Time Overcurrent Curves.

■ **NOTE**: The specified timing accuracy is applicable for currents above three times the pickup value.

Multiple of Tap Setting	Definite Time	Inverse Time	Very Inverse Time	Extremely Inverse Time
1.50	0.69899	4.53954	3.46578	4.83520
1.55	0.64862	4.15533	3.11203	4.28747
1.60	0.60539	3.81903	2.81228	3.83562
1.65	0.56803	3.52265	2.55654	3.45706
1.70	0.53558	3.25987	2.33607	3.13573
1.75	0.50725	3.02558	2.14431	2.85994
1.80	0.48245	2.81566	1.97620	2.62094
1.85	0.46068	2.62673	1.82779	2.41208
1.90	0.44156	2.45599	1.69597	2.22822
1.95	0.42477	2.30111	1.57823	2.06529
2.00	0.41006	2.16013	1.47254	1.92006
2.05	0.39721	2.03139	1.37723	1.78994
2.10	0.38606	1.91348	1.29093	1.67278
2.15	0.37648	1.80519	1.21249	1.56686
2.20	0.36554	1.72257	1.12812	1.47820
2.30	0.35293	1.54094	1.01626	1.32268
2.40	0.34115	1.39104	0.92207	1.19250
2.50	0.33018	1.26561	0.84190	1.08221
2.60	0.31999	1.15945	0.77301	0.98780
2.70	0.31057	1.06871	0.71334	0.90626
2.80	0.30189	0.99049	0.66127	0.83527
2.90	0.29392	0.92258	0.61554	0.77303
3.00	0.28666	0.86325	0.57515	0.71811
3.10	0.28007	0.81113	0.53930	0.66939
3.20	0.27415	0.76514	0.50733	0.62593
3.30	0.26889	0.72439	0.47870	0.58700
3.40	0.26427	0.68818	0.45297	0.55196
3.50	0.26030	0.65591	0.42977	0.52032
3.60	0.25697	0.62710	0.40879	0.49163
3.70	0.25429	0.60135	0.38977	0.46554
3.80	0.25229	0.57832	0.37248	0.44175
4.00	0.24975	0.53904	0.34102	0.40129
4.20	0.24572	0.50641	0.31528	0.36564
4.40	0.24197	0.47746	0.29332	0.33460
4.60	0.23852	0.45176	0.27453	0.30741
4.80	0.23541	0.42894	0.25841	0.28346

■ **NOTE**: The above times are in seconds and are given for a time dial of 1.0. For other time dial values, multiply the values in the table by the time dial value.

Table D-1A M-3410A Inverse Time Overcurrent Relay Characteristic Curves (1 of 2)

Multiple of Tap Setting	Definite Time	Inverse Time	Very Inverse Time	Extremely Inverse Time
5.00	0.23266	0.40871	0.24456	0.26227
5.20	0.23029	0.39078	0.23269	0.24343
5.40	0.22834	0.37495	0.22254	0.22660
5.60	0.22684	0.36102	0.21394	0.21151
5.80	0.22583	0.34884	0.20673	0.19793
6.00	0.22534	0.33828	0.20081	0.18567
6.20	0.22526	0.32771	0.19511	0.17531
6.40	0.22492	0.31939	0.19044	0.16586
6.60	0.22360	0.31150	0.18602	0.15731
6.80	0.22230	0.30402	0.18187	0.14957
7.00	0.22102	0.29695	0.17797	0.14253
7.20	0.21977	0.29027	0.17431	0.13611
7.40	0.21855	0.28398	0.17090	0.13027
7.60	0.21736	0.27807	0.16773	0.12492
7.80	0.21621	0.27253	0.16479	0.12003
8.00	0.21510	0.26734	0.16209	0.11555
8.20	0.21403	0.26251	0.15961	0.11144
8.40	0.21300	0.25803	0.15736	0.10768
8.60	0.21203	0.25388	0.15534	0.10422
8.80	0.21111	0.25007	0.15354	0.10105
9.00	0.21025	0.24660	0.15197	0.09814
9.50	0.20813	0.23935	0.14770	0.09070
10.00	0.20740	0.23422	0.14473	0.08474
10.50	0.20667	0.22923	0.14180	0.07943
11.00	0.20594	0.22442	0.13894	0.07469
11.50	0.20521	0.21979	0.13615	0.07046
12.00	0.20449	0.21536	0.13345	0.06667
12.50	0.20378	0.21115	0.13084	0.06329
13.00	0.20310	0.20716	0.12833	0.06026
13.50	0.20243	0.20341	0.12593	0.05755
14.00	0.20179	0.19991	0.12364	0.05513
14.50	0.20119	0.19666	0.12146	0.05297
15.00	0.20062	0.19367	0.11941	0.05104
15.50	0.20009	0.19095	0.11747	0.04934
16.00	0.19961	0.18851	0.11566	0.04784
16.50	0.19918	0.18635	0.11398	0.04652
17.00	0.19881	0.18449	0.11243	0.04539
17.50	0.19851	0.18294	0.11102	0.04442
18.00	0.19827	0.18171	0.10974	0.04362
18.50	0.19811	0.18082	0.10861	0.04298
19.00	0.19803	0.18029	0.10762	0.04250
19.50	0.19803	0.18014	0.10679	0.04219
20.00	0.19803	0.18014	0.10611	0.04205

■ **NOTE**: The above times are in seconds and are given for a time dial of 1.0. For other time dial values, multiply the values in the table by the time dial value.

Table D-1B M-3410A Inverse Time Overcurrent Relay Characteristic Curves (2 of 2)

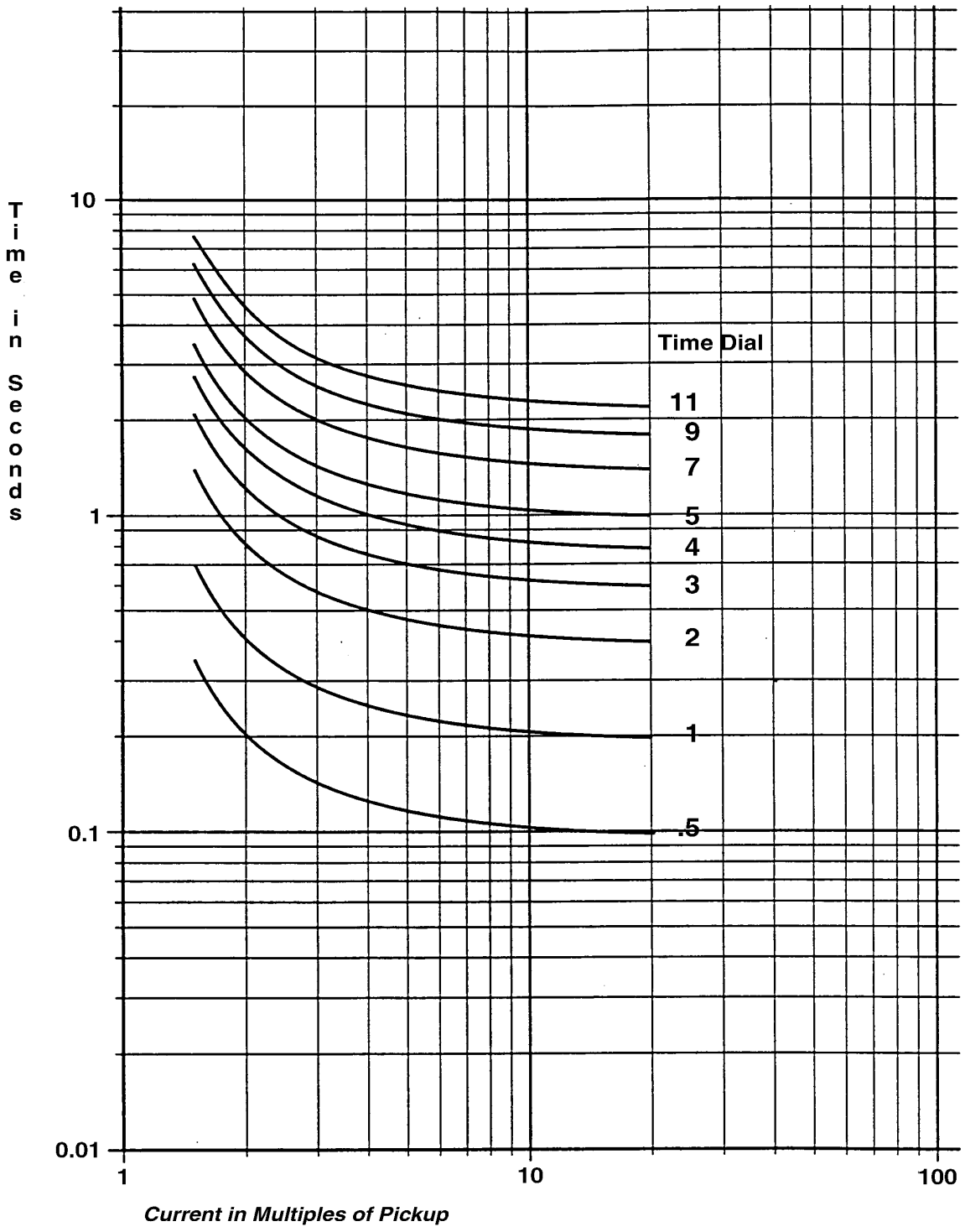

Figure D-1 Definite Time Overcurrent Curve

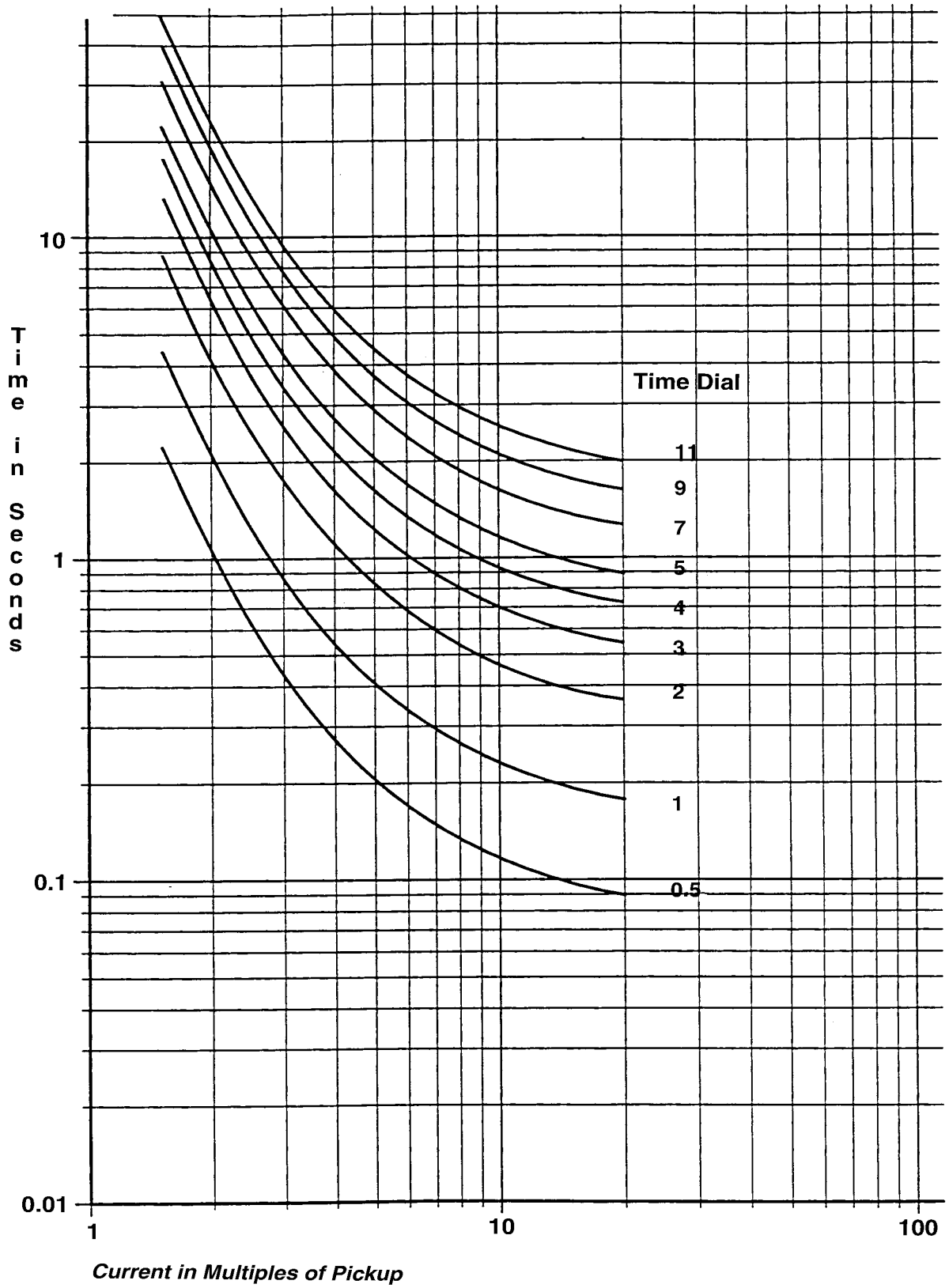

Figure D-2 Inverse Time Overcurrent Curve

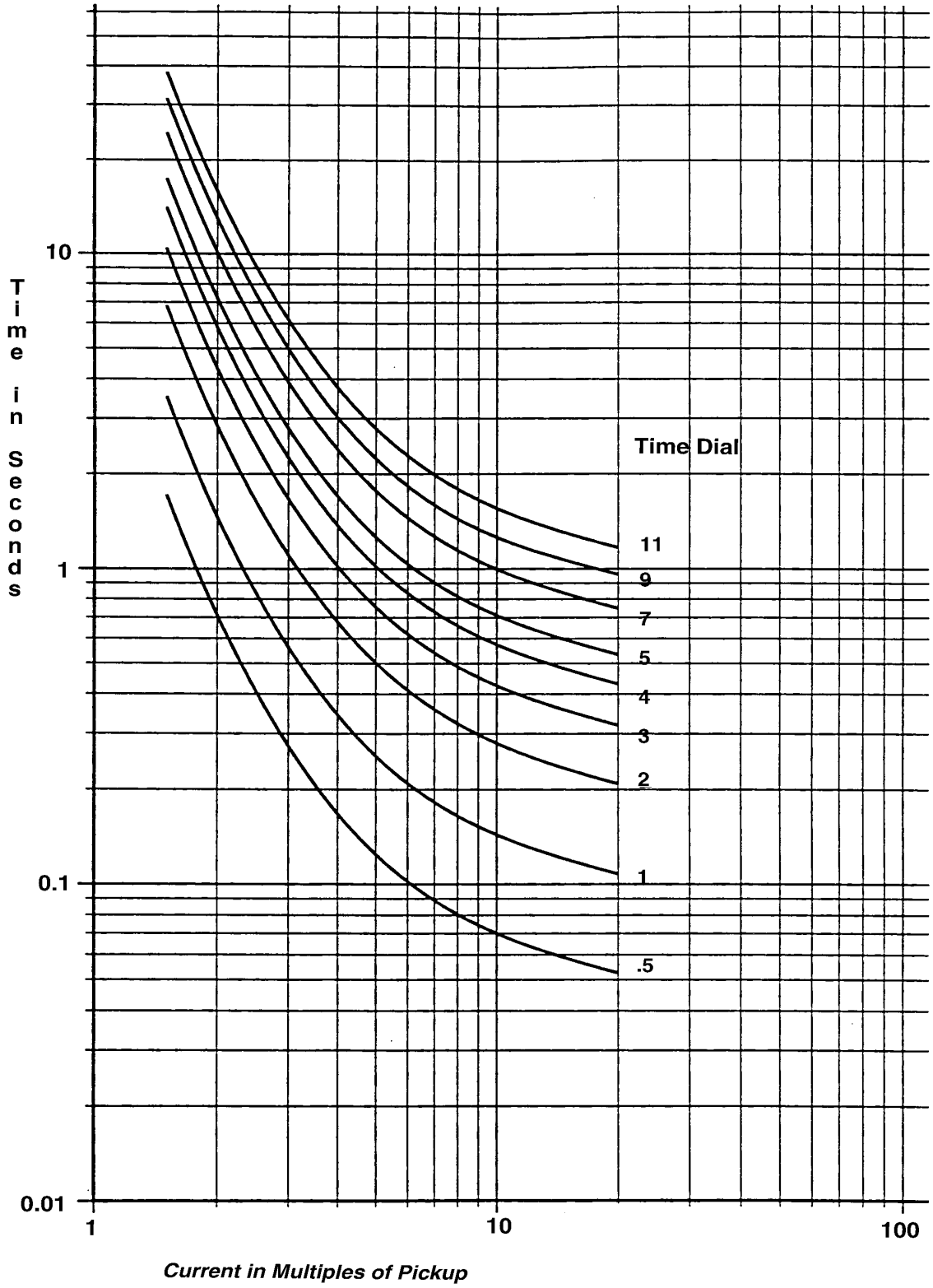

Figure D-3 Very Inverse Time Overcurrent Curve

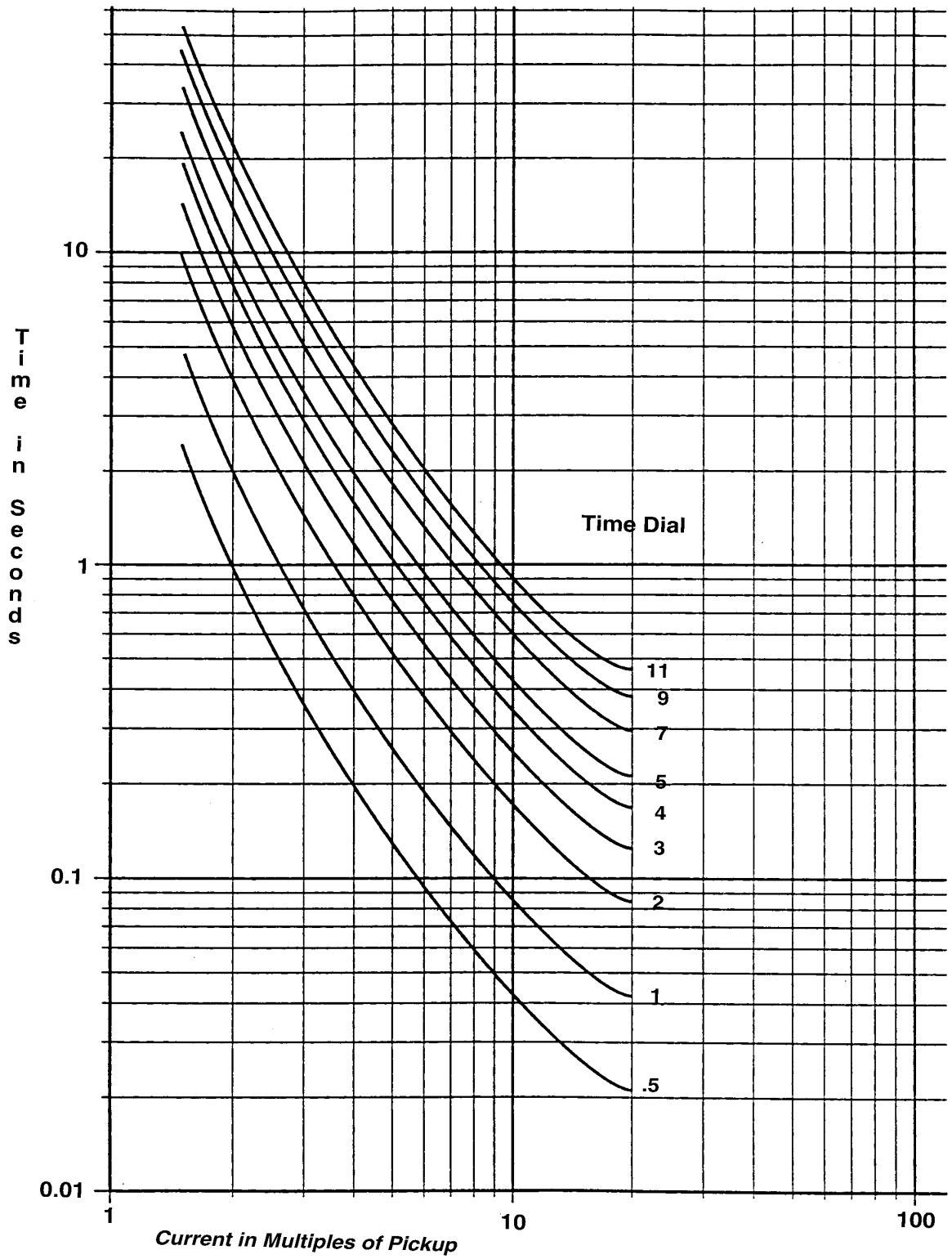

Figure D-4 Extremely Inverse Time Overcurrent Curve

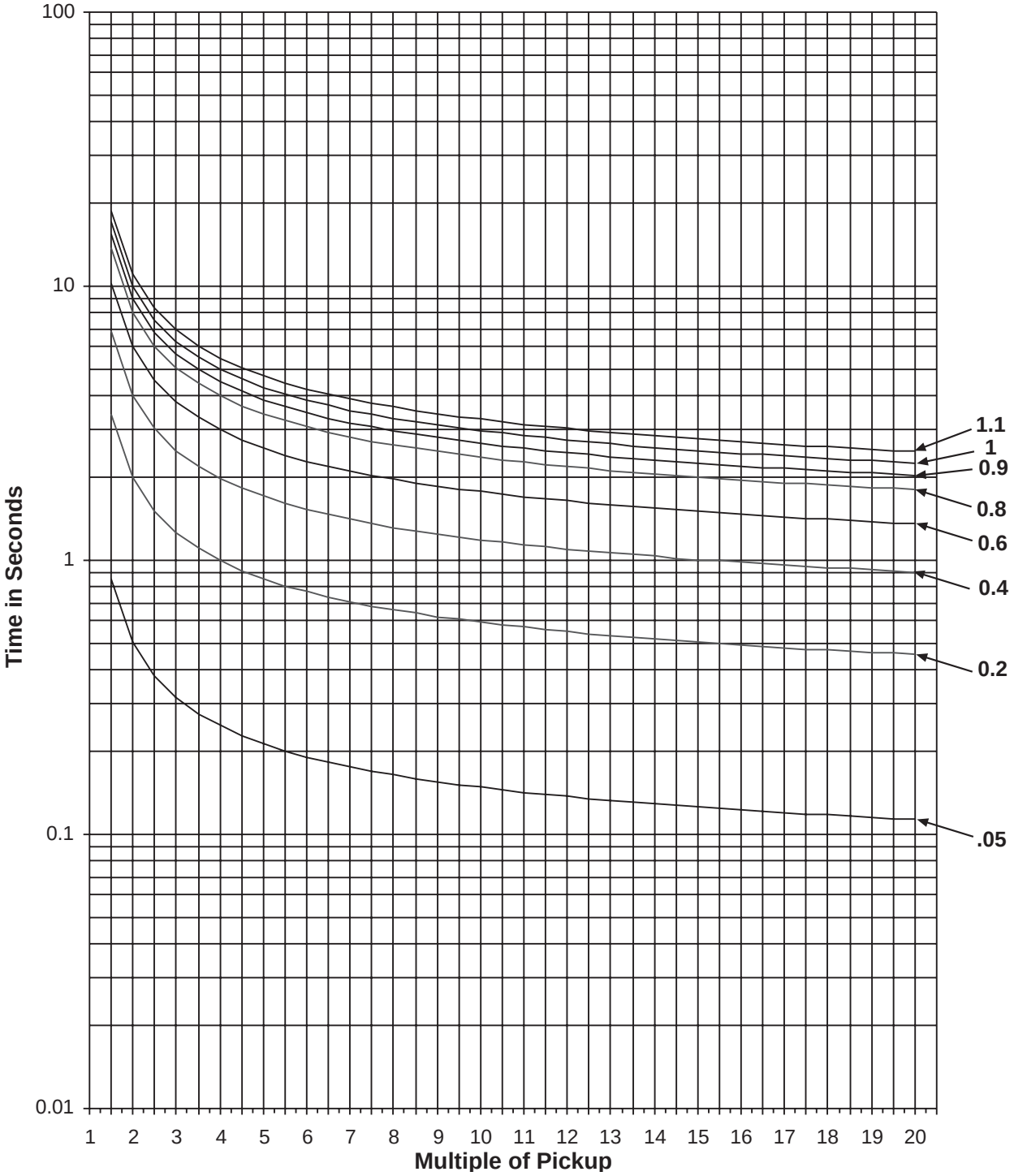

$$t = TD \times \left[\frac{0.14}{M^{0.02} - 1} \right]$$

Figure D-5 IEC Curve #1 Inverse

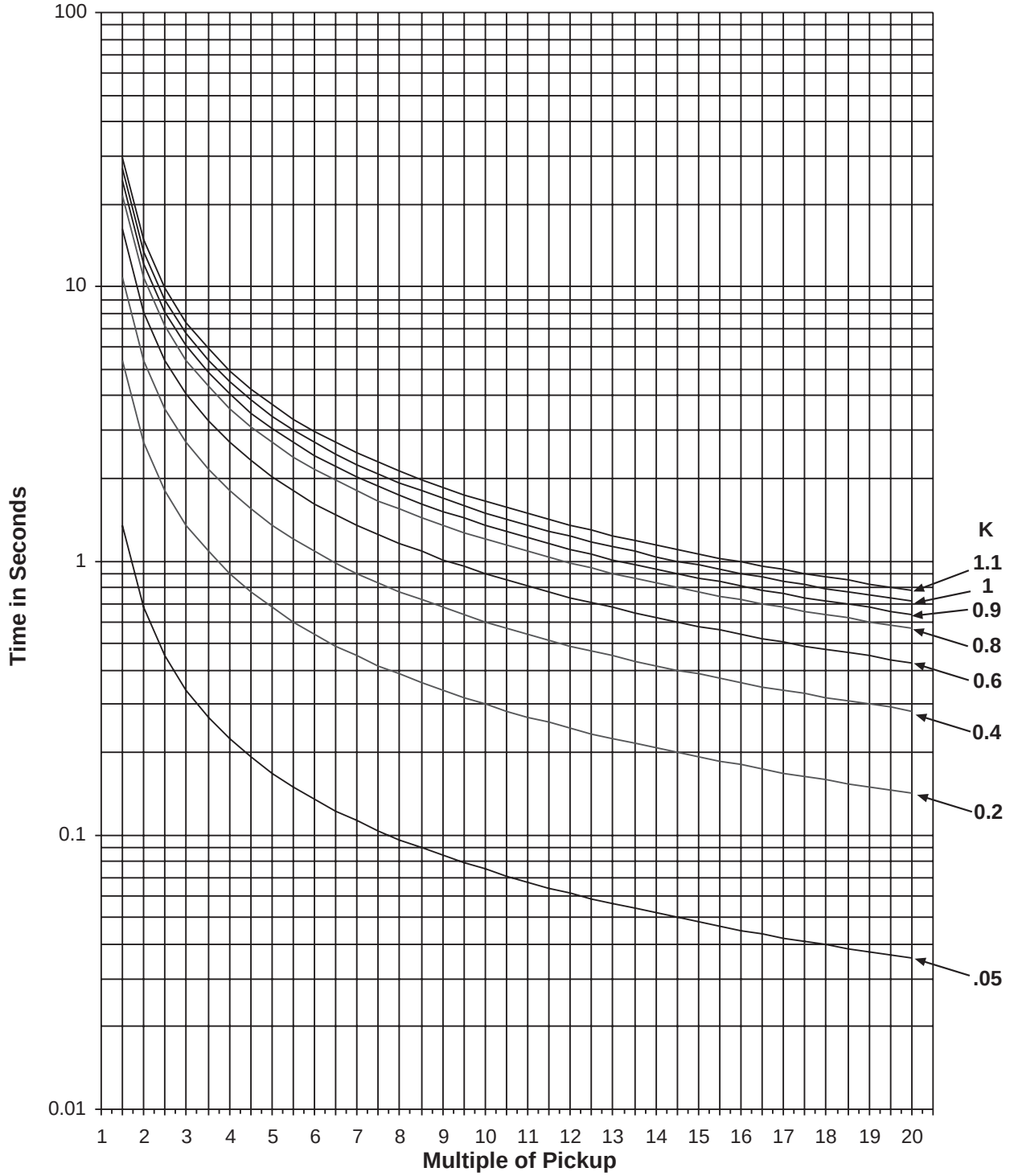

$$t = TD \times \left[\frac{13.5}{M - 1} \right]$$

Figure D-6 IEC Curve #2 Very Inverse

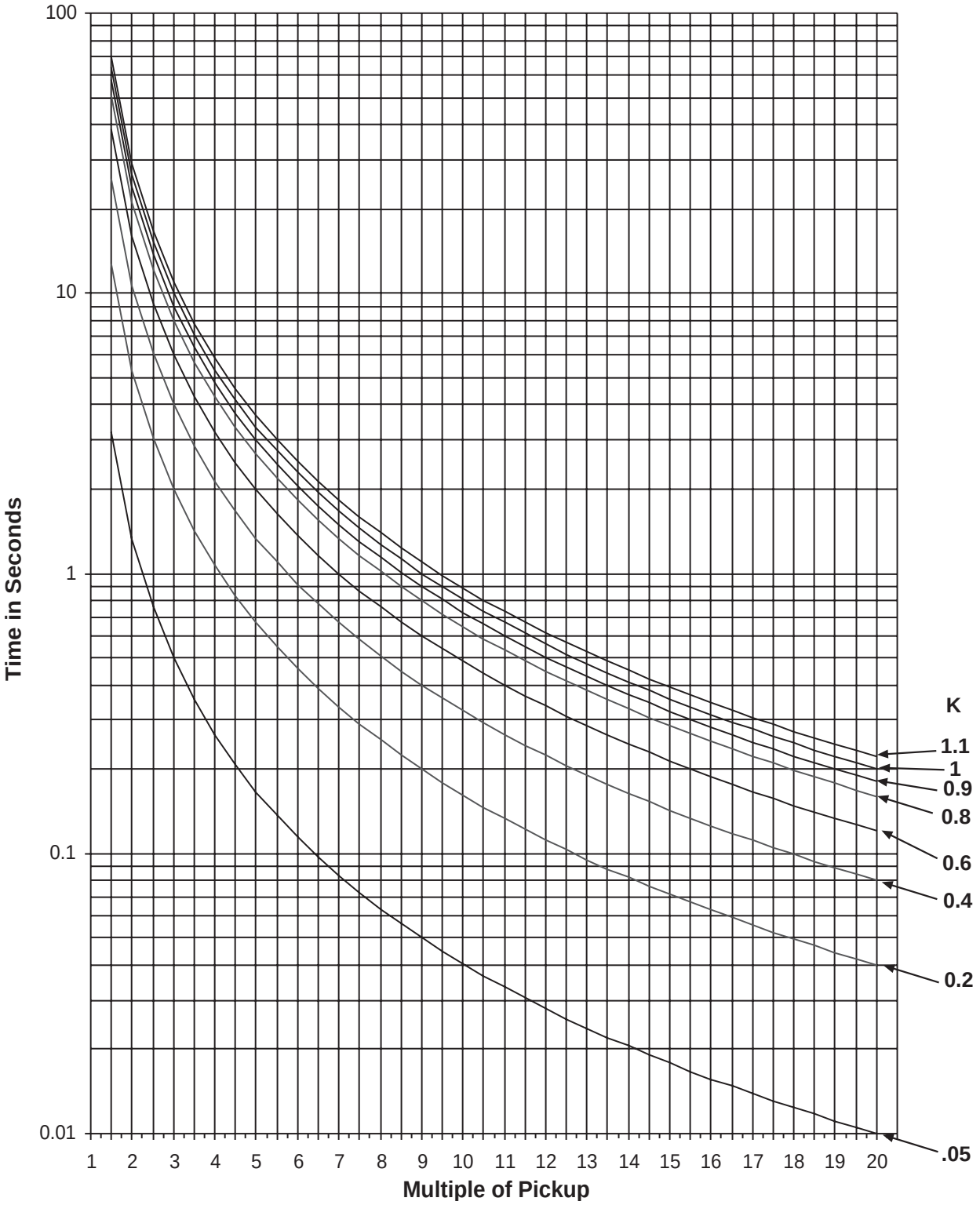

$$t = TD \times \left[\frac{80}{M^2 - 1} \right]$$

Figure D-7 IEC Curve #3 Extremely Inverse

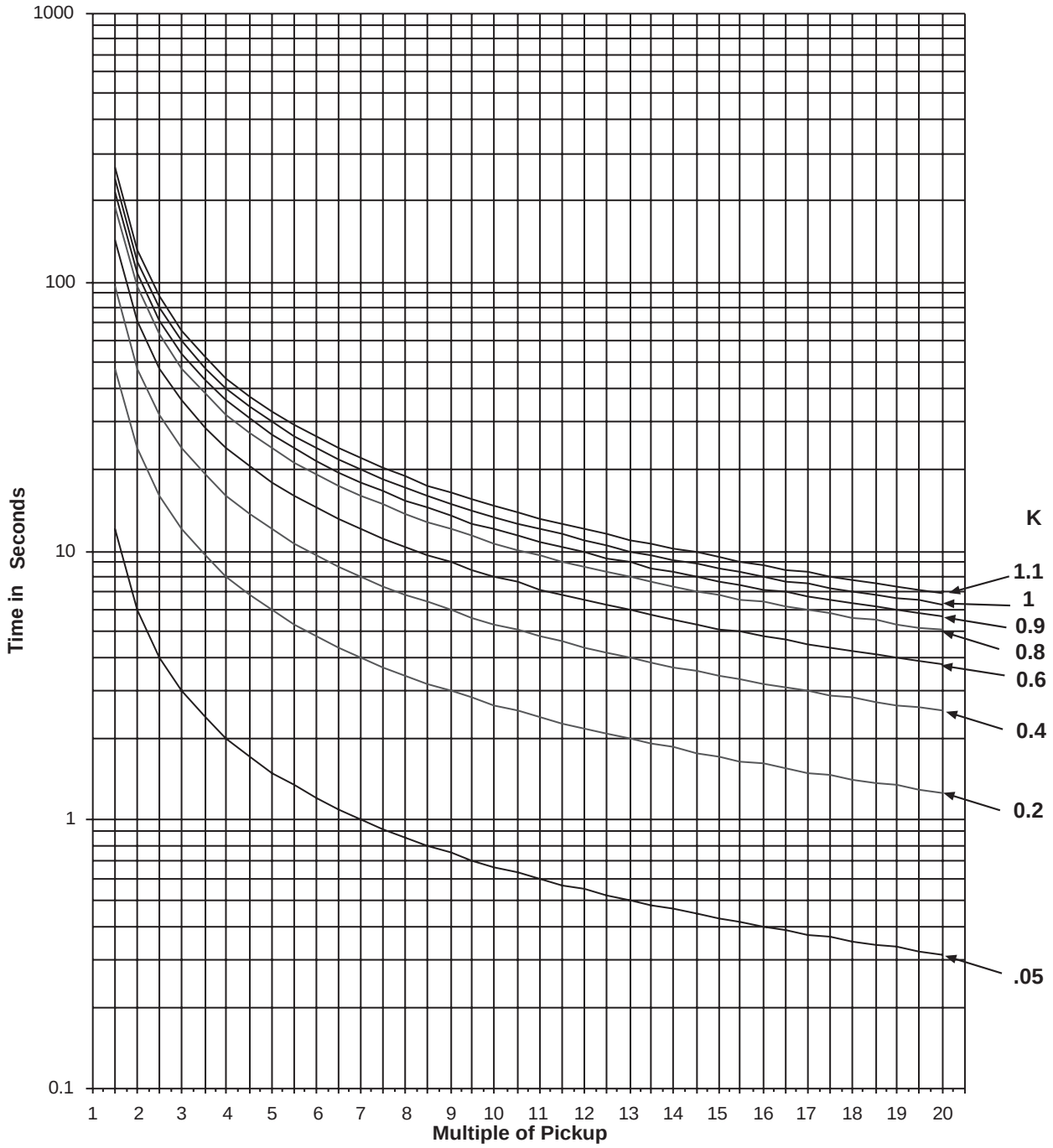

$$t = TD \times \left[\frac{120}{M - 1} \right]$$

Figure D-8 IEC Curve #4 Long-Time Inverse

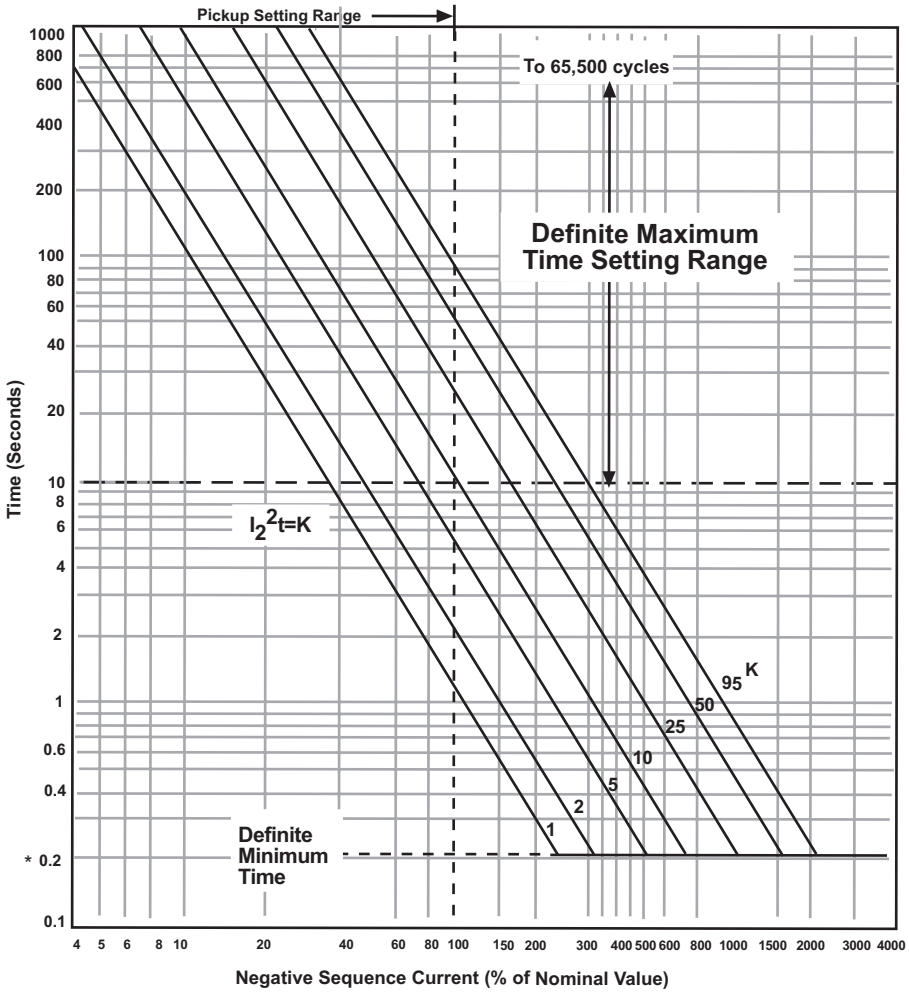

■ **NOTE**: When the phase current exceeds 3X I nominal, the operating times will be greater than those shown.

* 0.24 seconds for 50 Hz units.

Figure D-9 (46) Negative Sequence Overcurrent Inverse Time Curves for Generator Protection

E Appendix E – Declaration of Conformity

This Appendix lists those European standards which the M-3410A Intertie/Generator Protection Relay meets or exceeds.

DECLARATION OF CONFORMITY
(according to ISO/IEC Guide 22 EN 45014)

Manufacturer's Name:	***Beckwith Electric***
Manufacturer's Address:	***6190 118th Avenue North***
	Largo, FL 33773

The manufacturer hereby declares under our sole responsibility that the M-3410A product conforms to the following standards as of April 5th, 2002:

Electromagnetic Emissions: EN 55011

Emissions Limit 150 kHz to 30MHz
using CISPR-16 LISN
Radiated 30MHz to 1000MHz
Group 1 Class B Limits

Electromagnetic Generic Immunity: EN 61000-6-2

Electrostatic Discharge 8kV Contact; 8kV Air
BS EN 61000-4-2

Radiated RF 80MHz to 1000MHz 10V/m, 80% AM (1kHz)
ENV 50140 - BS EN 61000-4-3

Fast Transients 5ns/50ns Bursts @ 5kHz for 15ms 300ms for 1 min.
2kV power supply lines and earth 2kV signal data and control lines
BS EN 61000-4-4

Surge 1Kv Line to Line coupling, 2Kv Line to Earth coupling power supply lines
1Kv Line to Earth coupling RS-485 signal port.
EN 61000-4-5

Conducted RF 150KHz to 230MHz 10V emf
ENV 50141 - BS EN 61000-4-6

Power frequency magnetic field immunity test
30 A/m continuous
EN 61000-4-8

Voltage dips, short interruptions and voltage variations immunity tests
EN 61000-4-11

EN 61010-1:1993 Safety requirements for electrical equipment for measurement, control, and laboratory use Part 1. General requirements European Safety Directive

Manufacturer Contact:
Director of Quality Assurance
6190 118th, Ave North
Largo, FL 33773-3724
Tel (727) 544-2326

F Appendix – Layup and Storage

Appendix F includes the recommended storage parameters, periodic surveillance activities and layup configuration for the M-3410A Intertie/Generator Protection Relay.

Storage Requirements (Environment)

The recommended storage environment parameters for the M-3410A are:

- The ambient temperature where the M-3410A is stored is within a range of 5° C to 40° C
- The maximum relative humidity is less than or equal to 80% for temperatures up to 31° C, decreasing to 31° C linearly to 50% for relative humidity at 40° C.
- The storage area environment is free of dust, corrosive gases, flammable materials, dew, percolating water, rain and solar radiation.

Storage Requirements (Periodic Surveillance During Storage)

The M-3410A power supply contains electrolytic capacitors. It is recommended that power be applied to the relay every three to five years for a period of not less than one hour to help prevent the electrolytic capacitors from drying out.

Layup Configuration

The M-3410A includes a removable lithium battery (Beckwith Electric component B1, Figure 2-25). The battery provides power to the M-3410A clock and also provides power to the unit's nonvolatile memory when power is not applied to the unit.

Layup of the M-3410A requires removing the battery which stops the system clock. The steps necessary to remove the battery are as follows:

▲ **CAUTION:** Personnel performing this procedure should be trained in Electrostatic Discharge prevention to prevent damage to ESD sensitive components. Check and comply with appropriate regulations regarding the disposal of lithium batteries.

WARNING: Operating personnel must not remove the cover or expose the printed circuit board while power is applied. IN NO CASE may the circuit-based jumpers be moved with power applied.

1. Remove the screws that retain the rear cover, lift the rear cover off the relay.
2. Remove the six screws that retain the CPU board to the I/O board.
3. Disconnect the CPU board from the I/O board by pulling the board away from the I/O board. Moderate force will be needed to accomplish this.
4. Remove the battery from the CPU board.
5. Reinstall the CPU board onto the I/O board by reversing the removal process.
6. Insert the six screws that retain the CPU board to the I/O board.
7. Reinstall the rear cover on the relay; insert the screws that retain the rear cover.

This Page Left Intentionally Blank

Legal Information

Patent

The units described in this manual are covered by U.S. Patent 5,592,393.

Buyer shall hold harmless and indemnify the Seller, its directors, officers, agents, and employees from any and all costs and expense, damage or loss, resulting from any alleged infringementof United States Letters Patent or rights accruing thereform or trademarks, whether federal, state, or common law, arising from the Seller's compliance with Buyer's designs, specifications, or instructions.

Warranty

Seller hereby warrants that the goods which are the subject matter of this contract will be manufactured in a good workmanlike manner and all materials used herein will be new and reasonably suitable for the equipment. Seller warrants that if, during a period of five years from date of shipment of the equipment, the equipment rendered shall be found by the Buyer to be faulty or shall fail to peform in accordance with Seller's specifications of the product, Seller shall at his expense correct the same, provided, however, that Buyers shall ship the equipment prepaid to Seller's facility. The Seller's responsibility hereunder shall be limited to replacement value of the equipment furnished under this contract.

Seller makes no warranties expressed or implied other than those set out above. Seller specifically excludes the implied warranties of merchantibility and fitness for a particular purpose. There are no warranties which extend beyond the description contained herein. In no event shall Seller be liable for consequential, exemplary, or punitive damages of whatever nature.

Any equipment returned for repair must be sent with transportation charges prepaid. The equipment must remain the property of the Buyer. The aforementioned warranties are void if the value of the unit is invoiced to the Seller at the time of return.

Indemnification

The Seller shall not be liable for any property damages whatsoever or for any loss or damage arising out of, connected with, or resulting from this contract, or from the performance or breach thereof, or from all services covered by or furnished under this contract.

In no event shall the Seller be liable for special, incidental, exemplary, or consequential damages, including but not limited to, loss of profits or revenue, loss of use of the equipment or any associated equipment, cost of capital, cost of purchased power, cost of substitute equipment, facilities or services, downtime costs, or claims or damages of customers or employees of the Buyer for such damages, regardless of whether said claim or damages is based on contract, warranty, tort including negligence, or otherwise.

Under no circumstances shall the Seller be liable for any personal injury whatsoever.

It is agreed that when the equipment furnished hereunder are to be used or performed in connection with any nuclear installation, facility, or activity, Seller shall have no liability for any nuclear damage, personal injury, property damage, or nuclear contamination to any property located at or near the site of the nuclear facility. Buyer agrees to indemnify and hold harmless the Seller against any and all liability associated therewith whatsoever whether based on contract, tort, or otherwise. Nuclear installation or facility means any nuclear reactor and includes the site on which any of the foregoing is located, all operations conducted on such site, and all premises used for such operations.

Notice:

Any illustrations and descriptions by Beckwith Electric Co., Inc. are for the sole purpose of identification.

The drawings and/or specifications enclosed herein are the proprietary property of Beckwith Electric Co., Inc., and are issued in strict confidence; therefore, shall not be used as a basis of reproduction of the apparatus described therein without written permission of Beckwith Electric Co., Inc.

No illustration or description contained herein shall be construed as an express warranty of affirmation, promise, description, or sample, and any and all such express warranties are specifically excluded nor shall such illustration or description imply a warranty that the product is merchantable or fit for a particular purpose. There shall be no warranties which extend beyond those contained in the Beckwith Electric Co., Inc. terms of sale.

All rights reserved by Beckwith Electric Co., Inc. No reproduction may be made without prior written approval of the Company.

This Page Left Intentionally Blank

BECKWITH ELECTRIC CO., INC.
6190 - 118th Avenue North • Largo, Florida 33773-3724 U.S.A.
PHONE (727) 544-2326 • FAX (727) 546-0121
marketing@beckwithelectric.com
www.beckwithelectric.com
ISO 9001:2008

© 2001 Beckwith Electric Co. All Rights Reserved.
Printed in USA

800-3410A-IB-03MC1 01/13